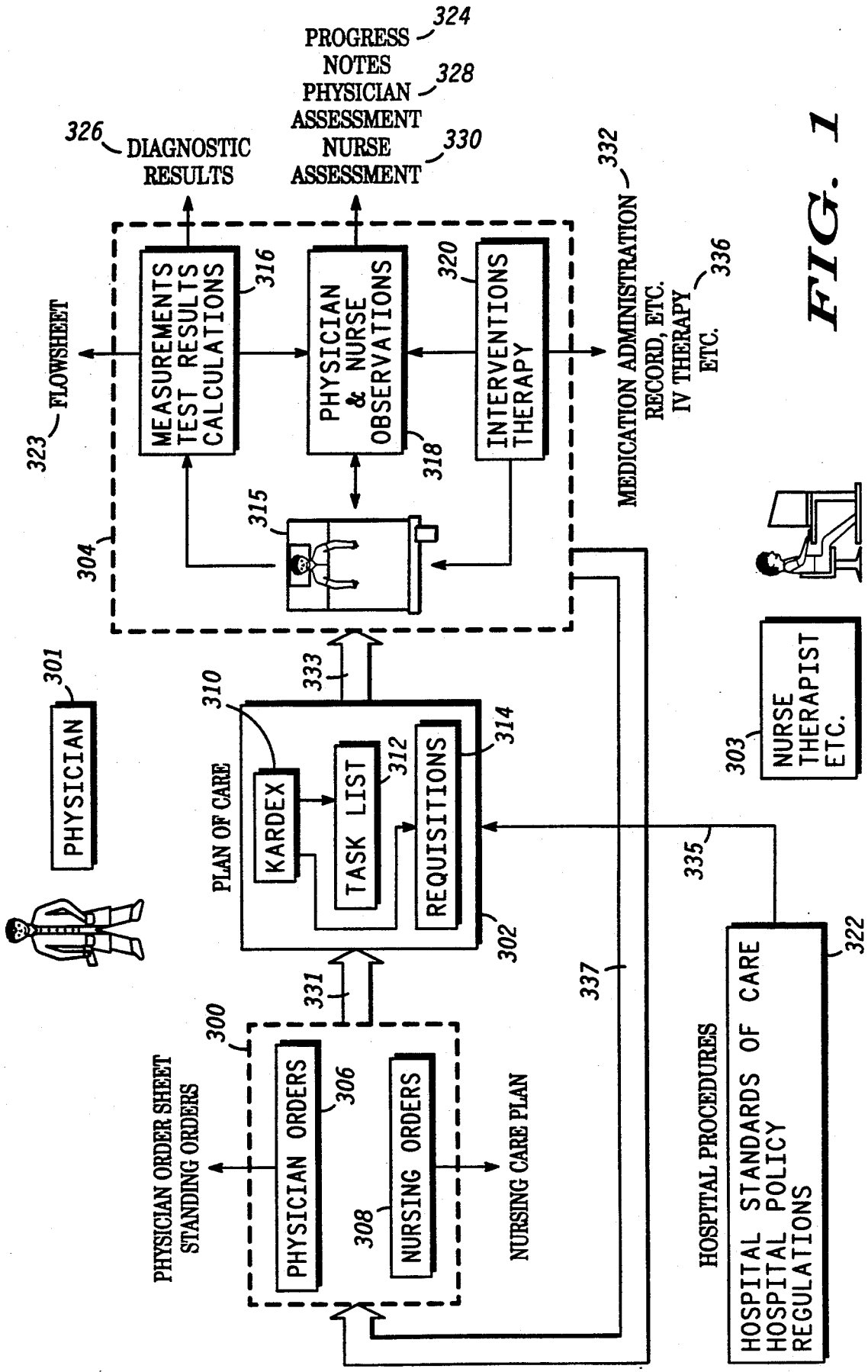
PROGRESS NOTES
324
PHYSICIAN ASSESSMENT
328
NURSE ASSESSMENT
330
326
DIAGNOSTIC RESULTS
332
MEDICATION ADMINISTRATION RECORD, ETC.
IV THERAPY
ETC.
336
FLOWSHEET
323
MEASUREMENTS TEST RESULTS CALCULATIONS
316
PHYSICIAN & NURSE OBSERVATIONS
318
320
INTERVENTIONS THERAPY
315
304
301
PHYSICIAN
310
333
PLAN OF CARE
KARDEX
TASK LIST
312
REQUISITIONS
314
302
303
NURSE THERAPIST ETC.
335
331
337
300
PHYSICIAN ORDER SHEET STANDING ORDERS
PHYSICIAN ORDERS
306
NURSING ORDERS
308
NURSING CARE PLAN
HOSPITAL PROCEDURES
HOSPITAL STANDARDS OF CARE
HOSPITAL POLICY
REGULATIONS
322

FIG. 1