United States Patent [19]

Kleemann et al.

[11] **3,947,166**

[45] **Mar. 30, 1976**

[54] **AGGLOMERATION APPARATUS**

[75] Inventors: **Thomas Kleemann; Willy Rothmayr,** both of La Tour-de-Peilz, Switzerland

[73] Assignee: **Societe D'Assistance Technique Pour Produits Nestle, S.A.,** La Tour-de-Peilz, Switzerland

[22] Filed: **Oct. 9, 1973**

[21] Appl. No.: **404,313**

[30] **Foreign Application Priority Data**

Oct. 17, 1972 Switzerland 15185/72

[52] **U.S. Cl.** **425/7;** 425/10; 264/12

[51] **Int. Cl.**[2] **A23L 1/00;** A23L 2/00

[58] **Field of Search** ..... 425/7, 10, 222, DIG. 101; 264/12, 14

[56] **References Cited**

UNITED STATES PATENTS

3,143,428	8/1964	Reimers et al.	425/222 X
3,271,493	9/1966	Van Den Berge	264/143
3,285,723	11/1966	Levecque et al.	425/7 X
3,347,648	10/1967	Krakauer et al.	425/7 X
3,436,792	4/1969	Hench	425/7 X
3,752,611	8/1973	Reed et al.	425/10 X
3,771,929	11/1973	Hellman et al.	425/7

Primary Examiner—Robert L. Spicer, Jr.
Attorney, Agent, or Firm—Watson Leavenworth Kelton & Taggart

[57] **ABSTRACT**

A process for agglomerating a powdered product comprises contacting the product with a current of steam and with a gaseous fluid the temperature of which is lower than the temperature of the steam. An apparatus for carrying out the process is also disclosed.
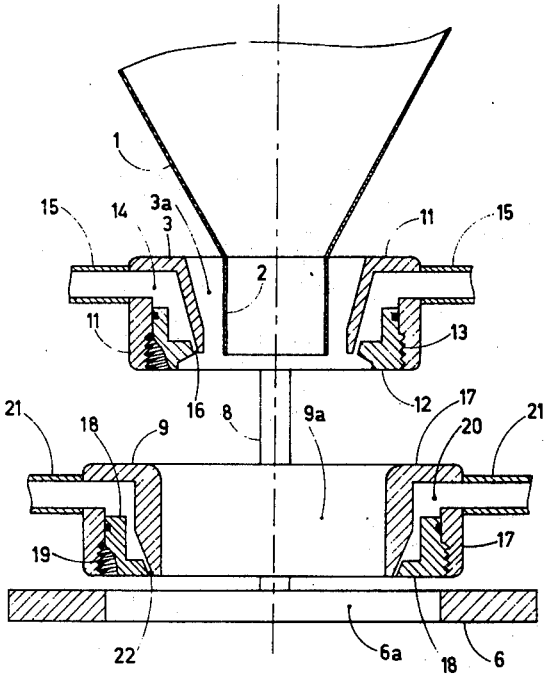
2 Claims, 2 Drawing Figures