FIG. 1A PRIOR ART

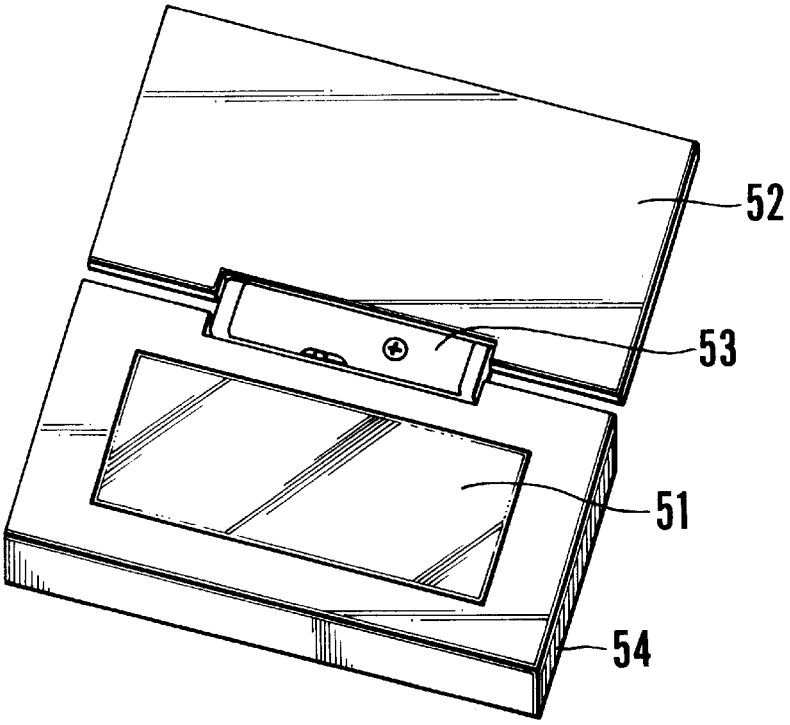

FIG. 1B PRIOR ART

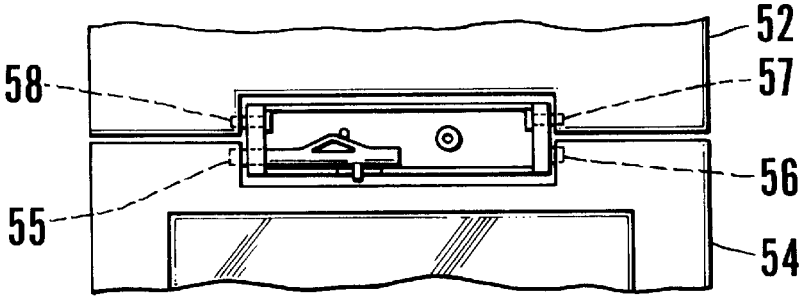
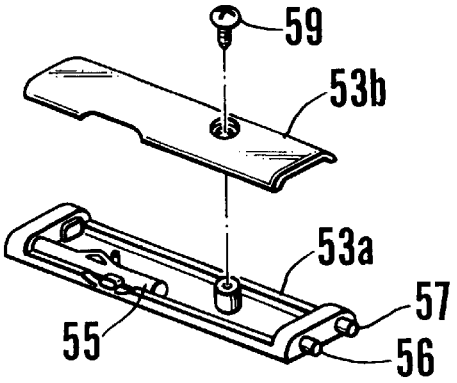
FIG. 1C PRIOR ART