US009638466B2

(12) **United States Patent**
Mellen

(10) **Patent No.: US 9,638,466 B2**
(45) **Date of Patent: May 2, 2017**

(54) **FURNACE SYSTEM WITH ACTIVE COOLING SYSTEM AND METHOD**

(71) Applicant: **Jonathan Y. Mellen**, Concord, NH (US)

(72) Inventor: **Jonathan Y. Mellen**, Concord, NH (US)

(*) Notice: Subject to any disclaimer, the term of this patent is extended or adjusted under 35 U.S.C. 154(b) by 974 days.

(21) Appl. No.: **13/729,201**

(22) Filed: **Dec. 28, 2012**

(65) **Prior Publication Data**

US 2014/0186785 A1 Jul. 3, 2014

(51) **Int. Cl.**
F27D 9/00 (2006.01)

(52) **U.S. Cl.**
CPC ***F27D 9/00*** (2013.01)

(58) **Field of Classification Search**
CPC F27D 9/00; F23N 1/00; F23N 3/00; F23N 5/00; F23N 1/08; F24F 13/08
See application file for complete search history.

(56) **References Cited**

U.S. PATENT DOCUMENTS

2,987,788 A * 6/1961 Lyman F27B 14/08 164/348
4,086,424 A 4/1978 Mellen, Sr.
4,423,516 A 12/1983 Mellen, Sr.
4,518,351 A 5/1985 Mellen, Sr.
4,753,192 A * 6/1988 Goldsmith C23C 8/00 118/715
4,802,441 A * 2/1989 Waugh C21D 1/84 118/666
4,830,342 A * 5/1989 Boneff B22F 3/15 266/252
4,931,624 A 6/1990 Mellen, Sr.
4,968,009 A * 11/1990 Asari F27D 9/00 266/249
4,979,896 A * 12/1990 Kinoshita F27D 9/00 110/336
5,097,890 A * 3/1992 Nakao C30B 25/10 118/724
5,878,191 A * 3/1999 Miyashita H01L 21/67115 118/50.1
6,005,225 A * 12/1999 Kowalski H01L 21/67098 118/50.1
6,155,341 A * 12/2000 Thompson F24F 11/0079 165/244
6,567,267 B1 * 5/2003 Wang H05K 7/20181 174/16.1
8,461,062 B2 * 6/2013 Sakai C23C 16/405 118/696
2003/0089426 A1 * 5/2003 Poor C21D 1/773 148/216
2003/0102103 A1 * 6/2003 Lombard B22D 17/007 164/335
2004/0074978 A1 * 4/2004 Rosen ..... G06Q 50/06 236/1 C

(Continued)

Primary Examiner — Jianying Atkisson
Assistant Examiner — Kun Kai Ma
(74) *Attorney, Agent, or Firm* — ZIP Law PLLC; Claire Zopf

(57) **ABSTRACT**

An active cooling system for a furnace that establishes steep temperature gradients, reduces temperature variations and performs rapid cooling, improving mechanical and electrical properties of heat-treated materials, increases overall throughput and promotes low compositional variation in the growth of crystals.
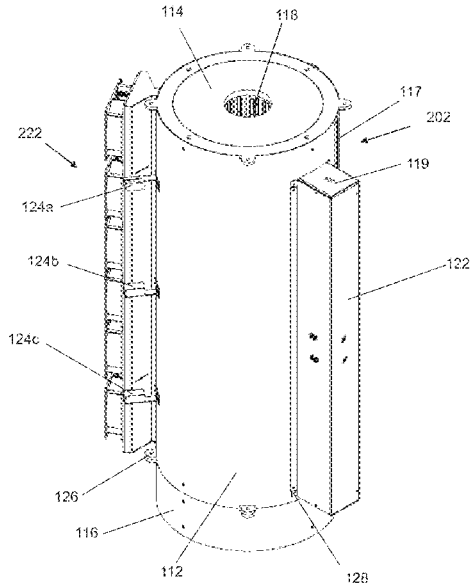
20 Claims, 17 Drawing Sheets