(No Model.) 2 Sheets—Sheet 1.

C. G. P. DE LAVAL.

STEAM TURBINE.

No. 522,066. Patented June 26, 1894.

Fig. 1.

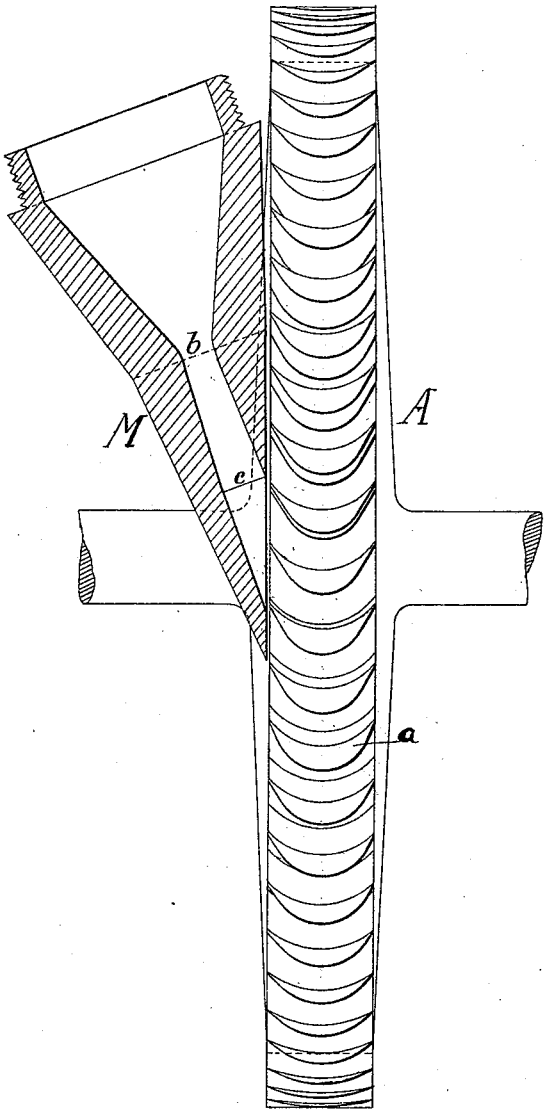

Witnesses:
Jean A. Johnson.
Leopold Almqvist.

Inventor:
Carl Gustaf Patrik de Laval
by A. W. Almqvist
Attorney

THE NATIONAL LITHOGRAPHING COMPANY,
WASHINGTON, D. C.