US005717566A

United States Patent [19]

Tao

[11] Patent Number: 5,717,566

[45] Date of Patent: Feb. 10, 1998

[54] **SHADE DEVICE FOR NOTEBOOK COMPUTER DISPLAY SCREEN**

[75] Inventor: **Adam M. Tao**, Laguna Niguel, Calif.

[73] Assignee: **Toshiba America Information Systems, Inc.**, Irvine, Calif.

[21] Appl. No.: **637,924**

[22] Filed: **May 1, 1996**

[51] **Int. Cl.**[6] **G06F 1/16**; H04N 5/64

[52] **U.S. Cl.** **361/681**; 348/834; 359/601

[58] **Field of Search** 361/681, 682, 361/683; 400/713, 714; 364/708.1; 348/834, 818, 823; 359/601, 610, 612

[56] **References Cited**

U.S. PATENT DOCUMENTS

3,733,436	5/1973	Rose	178/7.82
4,444,465	4/1984	Giulie et al.	350/276
4,863,242	9/1989	Correa	350/276
5,101,298	3/1992	Lentz et al.	359/612
5,218,474	6/1993	Kirschner	359/601
5,325,970	7/1994	Dillon et al.	206/576
5,508,757	4/1996	Chen	348/818

Primary Examiner—Lynn D. Feild
Attorney, Agent, or Firm—Lyon & Lyon LLP

[57] **ABSTRACT**

A shade device that facilitates the viewing of the contents displayed on the notebook computer display screen includes a bracket for mounting the shade device to a monitor display assembly of a notebook computer, a top panel hingedly connected to the bracket, an upper right panel hingedly connected to the top panel, a lower right panel hingedly connected to the upper right panel and the bracket, an upper left panel hingedly connected to the top panel, a lower left panel hingedly connected to the upper left panel and the bracket, and a flap hingedly connected to the top panel. The shade device being fully expandable to shade the display screen of a notebook computer and collapsible into a flat surface that fits between the display screen and the keyboard when the monitor display assembly of the notebook computer is closed.
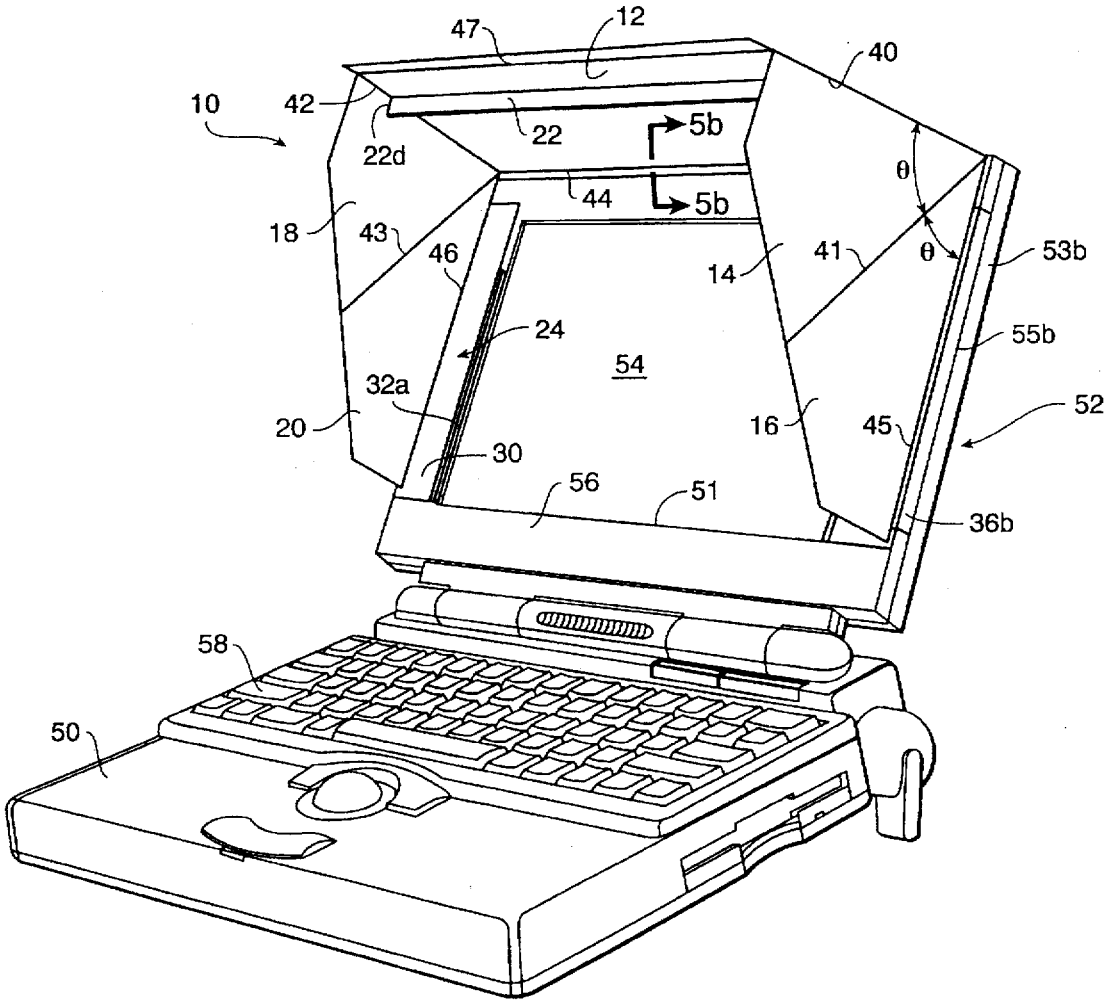
23 Claims, 7 Drawing Sheets