US008711566B2

(12) **United States Patent**
O'Brien

(10) **Patent No.: US 8,711,566 B2**
(45) **Date of Patent: Apr. 29, 2014**

(54) **EXPANDABLE MOBILE DEVICE**

(75) Inventor: **Paul M. O'Brien**, Sammamish, WA (US)

(73) Assignee: **Microsoft Corporation**, Redmond, WA (US)

(*) Notice: Subject to any disclaimer, the term of this patent is extended or adjusted under 35 U.S.C. 154(b) by 241 days.

(21) Appl. No.: **13/224,839**

(22) Filed: **Sep. 2, 2011**

(65) **Prior Publication Data**

US 2013/0058063 A1 Mar. 7, 2013

(51) **Int. Cl.**
G06F 1/16 (2006.01)

(52) **U.S. Cl.**
USPC **361/724**

(58) **Field of Classification Search**
USPC 361/724
See application file for complete search history.

(56) **References Cited**

U.S. PATENT DOCUMENTS

5,349,772	A	9/1994	Pardue	
6,288,891	B1	9/2001	Hasegawa et al.	
6,532,147	B1	3/2003	Christ, Jr.	
6,643,124	B1 *	11/2003	Wilk	361/679.04
6,762,929	B2 *	7/2004	Sawyer	361/679.05
6,859,219	B1 *	2/2005	Sall	345/1.1
6,931,265	B2 *	8/2005	Reyes et al.	455/566
7,149,557	B2	12/2006	Chadha	
7,426,107	B2 *	9/2008	Yeh et al.	361/679.27
7,558,057	B1 *	7/2009	Naksen et al.	361/679.56
7,667,962	B2 *	2/2010	Mullen	361/679.56
7,746,293	B2 *	6/2010	Kobayashi	345/30
7,830,333	B2 *	11/2010	Aoki	345/1.3
7,928,934	B2	4/2011	Kane	
7,965,258	B2 *	6/2011	Aoki	345/1.3
8,170,631	B2 *	5/2012	Aoki et al.	455/575.3
8,194,399	B2 *	6/2012	Ashcraft et al.	361/679.05
8,289,232	B2 *	10/2012	Kobayashi	345/30
8,363,393	B2 *	1/2013	Bemelmans	361/679.21
8,379,377	B2 *	2/2013	Walters et al.	361/679.04
8,493,726	B2 *	7/2013	Visser et al.	361/679.3

(Continued)

FOREIGN PATENT DOCUMENTS

EP	2187247	5/2010

OTHER PUBLICATIONS

Linder, Brad "Will Smartphones of the Future Eliminate the Need for Tablets?", Retrieved from: <http://liliputing.com/2010/08/will-smartphones-of-the-future-eliminate-the-need-for-tablets.html> on Feb. 21, 2011, (Aug. 10, 2010), 9 pages.

(Continued)

Primary Examiner — Lisa Lea Edmonds
(74) *Attorney, Agent, or Firm* — Judy Yee; Micky Minhas; Wolfe-SBMC

(57) **ABSTRACT**

In embodiments of an expandable mobile device, the device includes first and second housing parts that slide-engage relative to each other to extend and retract the device. The expandable mobile device includes a flexible display that extends from an interior of the expandable mobile device as the second housing part slides out from the first housing part. The flexible display also retracts into the interior of the expandable mobile device as the second housing part slides into the first housing part. Rollers are integrated in the first housing part and bend the flexible display around a fixed radius to position a first section of the flexible display approximately parallel to a second section of the flexible display in a retracted position of the expandable mobile device.
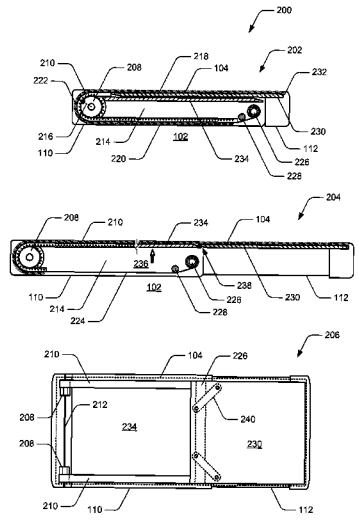
17 Claims, 5 Drawing Sheets