US009411066B1

(12) **United States Patent**
Olsson et al.

(10) **Patent No.: US 9,411,066 B1**
(45) **Date of Patent: *Aug. 9, 2016**

(54) **SONDES AND METHODS FOR USE WITH BURIED LINE LOCATOR SYSTEMS**

(75) Inventors: **Mark S. Olsson**, La Jolla, CA (US); **Michael J. Martin**, San Diego, CA (US); **Anthony L. Coduti**, Lakeside, CA (US)

(73) Assignee: **SEESCAN, INC.**, San Diego, CA (US)

(*) Notice: Subject to any disclaimer, the term of this patent is extended or adjusted under 35 U.S.C. 154(b) by 927 days.

This patent is subject to a terminal disclaimer.

(21) Appl. No.: **13/356,408**

(22) Filed: **Jan. 23, 2012**

Related U.S. Application Data

(60) Continuation of application No. 12/780,311, filed on May 14, 2010, now Pat. No. 8,106,660, which is a division of application No. 12/243,191, filed on Oct. 1, 2008, now Pat. No. 7,733,077, which is a continuation of application No. 11/970,818, filed on Jan. 8, 2008, now Pat. No. 7,443,154, which is a division of application No. 10/956,328, filed on Oct. 1, 2004, now Pat. No. 7,336,078.

(60) Provisional application No. 60/508,723, filed on Oct. 4, 2003.

(51) **Int. Cl.**

G01V 3/11	(2006.01)
G01V 3/08	(2006.01)
G01V 3/10	(2006.01)
G01V 3/15	(2006.01)

(52) **U.S. Cl.**
CPC ***G01V 3/081*** (2013.01); ***G01V 3/08*** (2013.01); ***G01V 3/10*** (2013.01); *G01V 3/15* (2013.01)

(58) **Field of Classification Search**
CPC G01V 3/15; G01V 3/08; H01Q 7/08
USPC 324/326, 67; 343/728, 788, 867
See application file for complete search history.

(56) **References Cited**

U.S. PATENT DOCUMENTS

3,549,818	A	*	12/1970	Turner	343/787
3,623,116	A	*	11/1971	Green et al.	343/788
3,746,106	A		7/1973	McCullough et al.	
3,836,842	A	*	9/1974	Zimmermann et al.	324/239
3,975,735	A		8/1976	McCullough et al.	
4,328,552	A		5/1982	Stovall	
5,055,793	A		10/1991	Mulcahey	
5,155,442	A		10/1992	Mercer	
5,337,002	A		8/1994	Mercer	
5,640,092	A	*	6/1997	Motazed et al.	324/326
5,754,049	A		5/1998	Howell	
6,084,545	A		7/2000	Lier et al.	
6,581,480	B1		6/2003	May et al.	

(Continued)

FOREIGN PATENT DOCUMENTS

EP PCT/US14/032274 10/2015

OTHER PUBLICATIONS

Goldak, "Model 7200 Valve Locator," Specification, Circa 2004, 2 Pages, Glendale, CA, USA.

(Continued)

Primary Examiner — Reena Aurora
(74) *Attorney, Agent, or Firm* — Steven C. Tietsworth, Esq.

(57) **ABSTRACT**

Sondes and sonde arrays for use with portable buried object locating systems are disclosed.
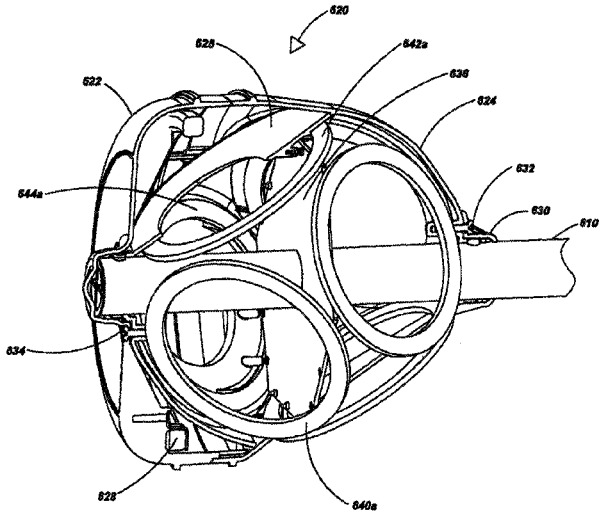
21 Claims, 18 Drawing Sheets