US009510866B2

(12) **United States Patent**
Hammer

(10) **Patent No.: US 9,510,866 B2**
(45) **Date of Patent: Dec. 6, 2016**

(54) **PIVOTING SPINAL FIXATION DEVICES**

(75) Inventor: **Michael Hammer**, Pine Brook, NJ (US)

(73) Assignee: **BLACKSTONE MEDICAL, INC.**, Lewisville, TX (US)

(*) Notice: Subject to any disclaimer, the term of this patent is extended or adjusted under 35 U.S.C. 154(b) by 309 days.

(21) Appl. No.: **13/586,727**

(22) Filed: **Aug. 15, 2012**

(65) **Prior Publication Data**

US 2014/0052189 A1 Feb. 20, 2014

(51) **Int. Cl.**
A61B 17/70 (2006.01)

(52) **U.S. Cl.**
CPC ***A61B 17/7032*** (2013.01); ***A61B 17/7007*** (2013.01); ***A61B 17/7049*** (2013.01); *A61B 17/7055* (2013.01); *A61B 2090/037* (2016.02)

(58) **Field of Classification Search**
CPC A61B 17/7001; A61B 17/7041; A61B 17/7043; A61B 17/7049; A61B 17/7037; A61B 17/7055; A61B 17/7032; A61B 17/7007
USPC 606/60, 246–279, 300–320, 325–328
See application file for complete search history.

(56) **References Cited**

U.S. PATENT DOCUMENTS

5,261,907 A 11/1993 Vignaud et al.
5,312,405 A * 5/1994 Korotko A61B 17/7052 606/252
5,527,314 A 6/1996 Brumfield et al.
5,545,167 A * 8/1996 Lin A61B 17/7037 411/349
5,676,665 A 10/1997 Bryan
5,713,898 A * 2/1998 Stucker A61B 17/7044 606/280
5,899,905 A * 5/1999 Errico A61B 17/7032 606/256
5,928,233 A * 7/1999 Apfelbaum A61B 17/7055 606/261
5,964,760 A * 10/1999 Richelsoph A61B 17/7037 606/278
5,980,521 A * 11/1999 Montague A61B 17/7052 606/250
5,989,250 A * 11/1999 Wagner A61B 17/7038 606/250
6,171,311 B1 * 1/2001 Richelsoph A61B 17/7049 606/250
6,238,396 B1 * 5/2001 Lombardo A61B 17/7052 606/251

(Continued)

FOREIGN PATENT DOCUMENTS

EP 1665994 A1 7/2006
EP 1762195 A1 3/2007

OTHER PUBLICATIONS

thefreedictionary.com definition of "rod". thefreedictionary.com/rod. Accessed on Feb. 4, 2015.*

(Continued)

Primary Examiner — Lynnsy Summitt
(74) *Attorney, Agent, or Firm* — Baker & McKenzie LLP

(57) **ABSTRACT**

Disclosed embodiments relate to connector systems comprising a linking element, a rod connection element partially received in the linking element. In an embodiment, the rod connection element is operable to rotate about the first longitudinal axis relative to the linking element. A fastener is operable to be received in the rod connection element, wherein the fastener is operable to actuate a connection mechanism to substantially fix the rod connection element in a rotational orientation relative to the first longitudinal axis and substantially fix the rod in a longitudinal position relative to the rod connection element.
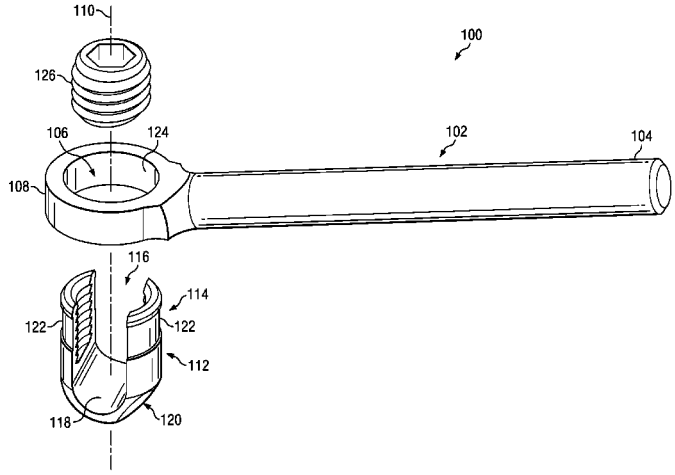
20 Claims, 9 Drawing Sheets