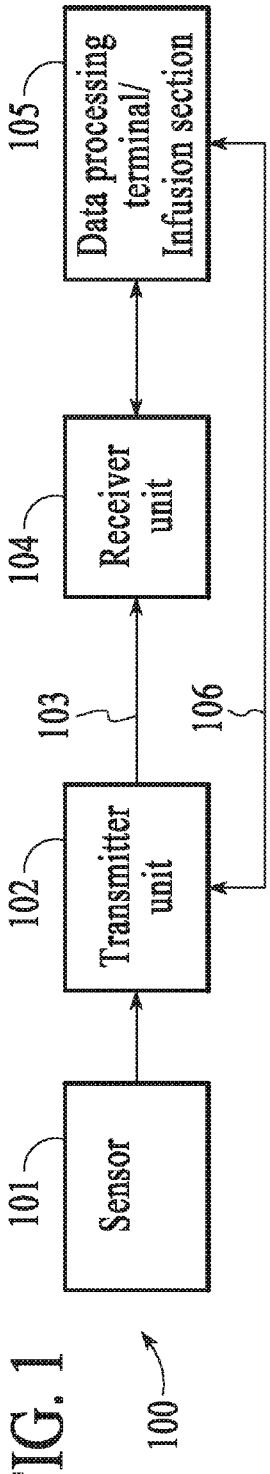
Sensor
101
Transmitter unit
102
103
Receiver unit
104
Data processing terminal/ Infusion section
105
106
100

FIG. 1

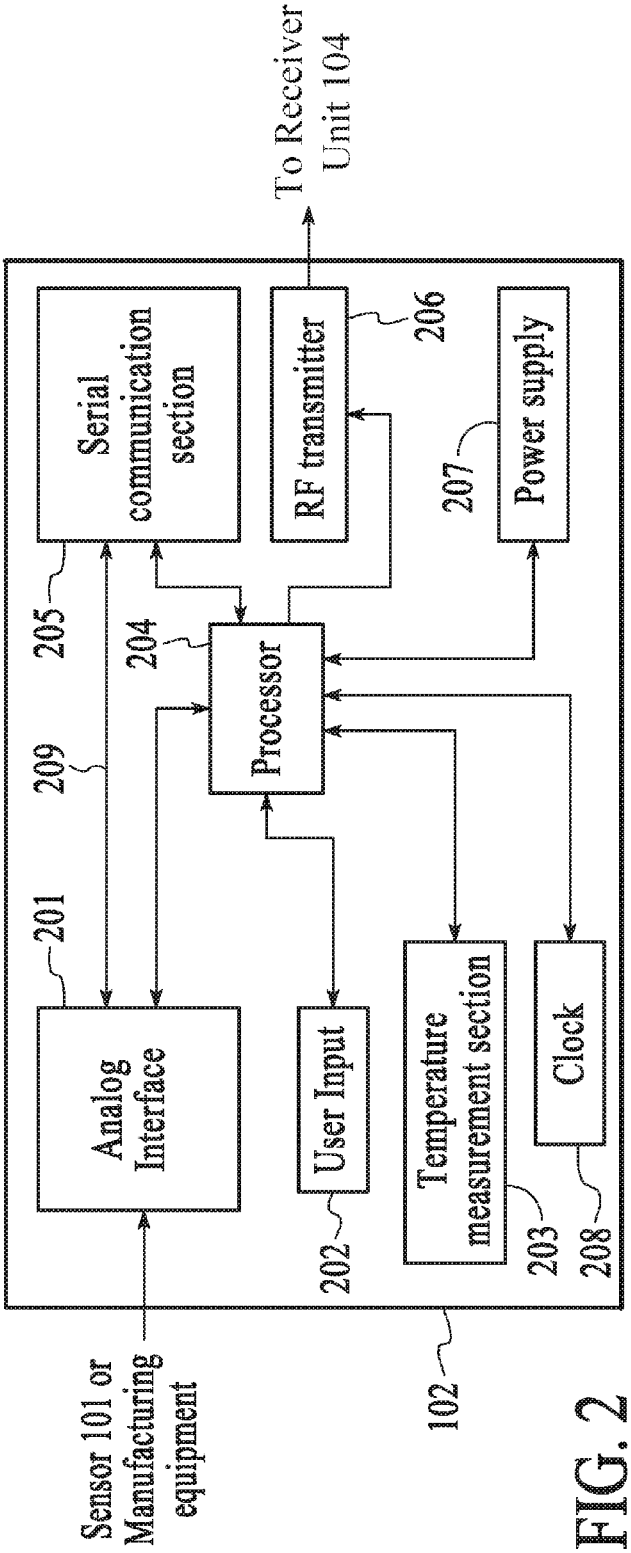
To Receiver Unit 104
Serial communication section
205
RF transmitter
206
Power supply
207
Processor
204
209
Analog Interface
201
User Input
202
Temperature measurement section
203
Clock
208
Sensor 101 or Manufacturing equipment
102

FIG. 2