Nov. 24, 1942. C. I. MacNEIL ET AL 2,302,966

PUMP

Filed Jan. 2, 1940

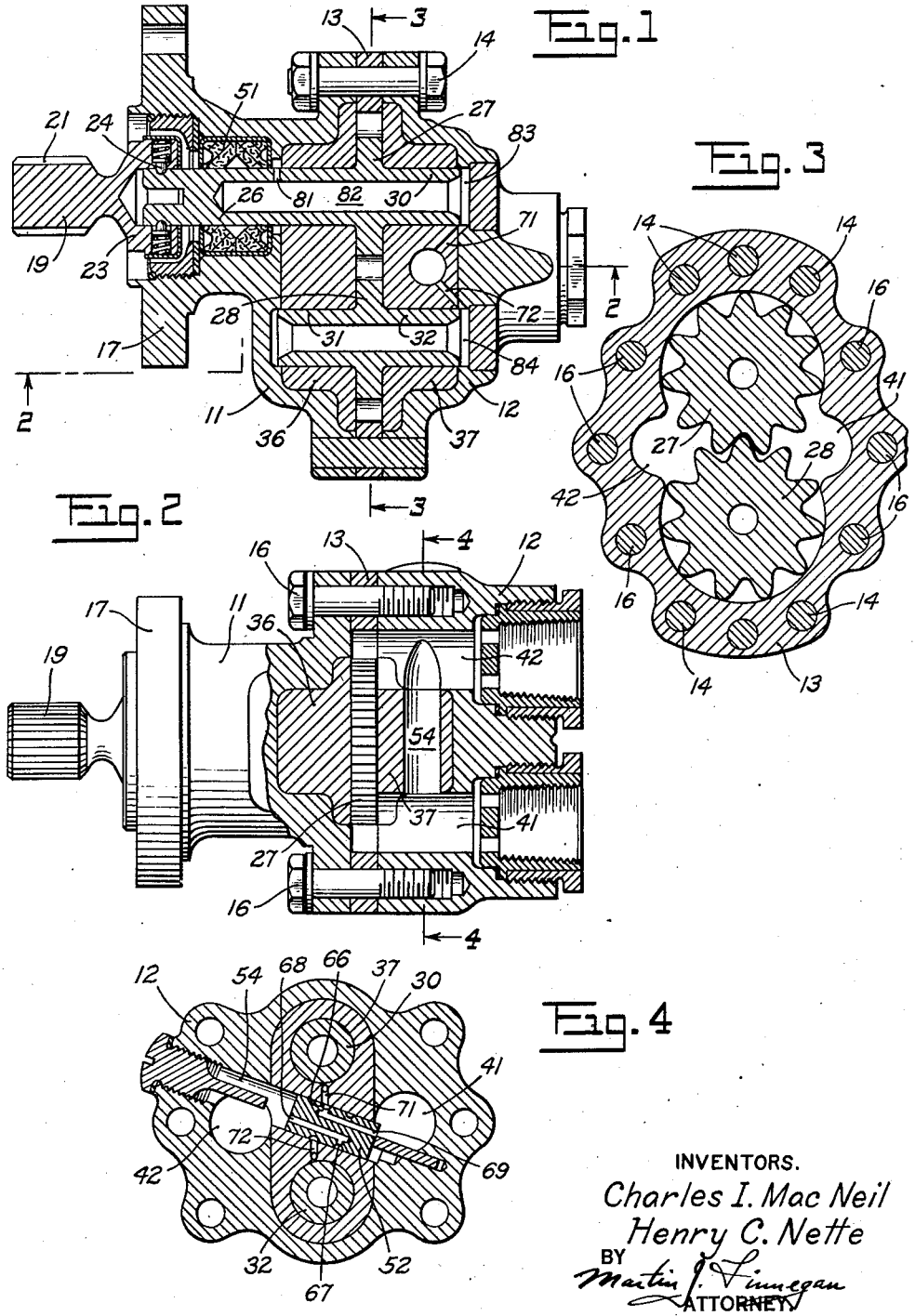

INVENTORS.
Charles I. Mac Neil
Henry C. Nette
BY
Martin J. Finnegan
ATTORNEY