FIG.1

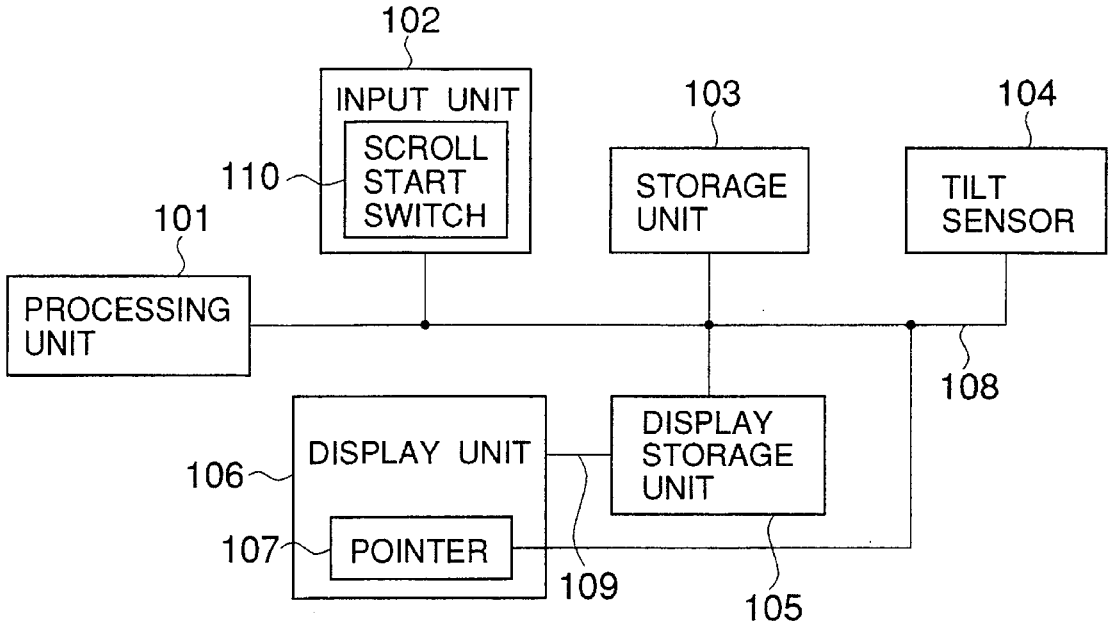
102
INPUT UNIT
SCROLL START SWITCH
110
101
PROCESSING UNIT
103
STORAGE UNIT
104
TILT SENSOR
108
DISPLAY UNIT
106
107
POINTER
DISPLAY STORAGE UNIT
109
105

FIG.2

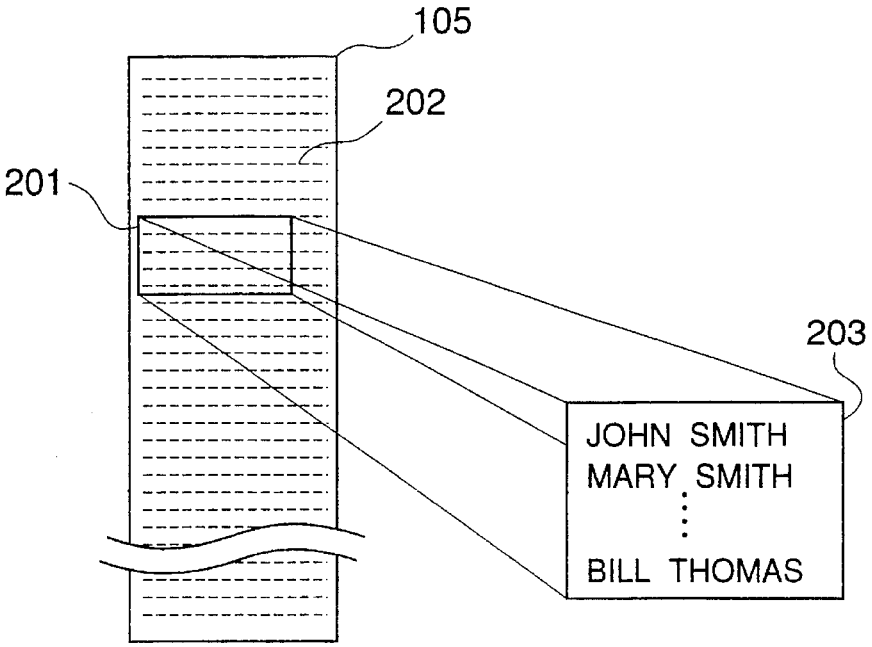
105
202
201
203
JOHN SMITH
MARY SMITH
BILL THOMAS