US008202066B2

(12) **United States Patent**
Nakken

(10) **Patent No.: US 8,202,066 B2**
(45) **Date of Patent: Jun. 19, 2012**

(54) **PISTON ENGINE**

(75) Inventor: **Mareno Kennet Nakken**, Fiksdal (NO)

(73) Assignee: **Sperre Mek. Verksted AS**, Ellingsoy (NO)

(*) Notice: Subject to any disclaimer, the term of this patent is extended or adjusted under 35 U.S.C. 154(b) by 1161 days.

(21) Appl. No.: **11/233,567**

(22) Filed: **Sep. 22, 2005**

(65) **Prior Publication Data**

US 2007/0237657 A1 Oct. 11, 2007

(30) **Foreign Application Priority Data**

Sep. 24, 2004 (NO) 20044014

(51) **Int. Cl.**
F04B 39/06 (2006.01)

(52) **U.S. Cl.** ..... **417/359**; 92/140; 74/579 R; 74/579 E

(58) **Field of Classification Search** ..... 417/415, 417/222.1, 423, 15, 359; 464/78; 74/579 R, 74/579 E; 123/192.1; 92/140
See application file for complete search history.

(56) **References Cited**

U.S. PATENT DOCUMENTS

1,844,416	A	2/1932	Bacher et al.	
2,278,832	A	4/1942	Cornelius	
3,150,506	A	9/1964	Alcaro	
4,257,540	A *	3/1981	Wegmann et al.	222/262
4,836,755	A	6/1989	Nitsche et al.	
4,941,807	A *	7/1990	Foster	417/199.1
5,299,980	A *	4/1994	Agius	464/99
5,675,873	A *	10/1997	Groess	24/284
6,439,188	B1 *	8/2002	Davis	123/193.2
7,377,035	B2 *	5/2008	Bin-Nun et al.	29/888.048

FOREIGN PATENT DOCUMENTS

CA	2085112	5/1993
GB	1 532 553	11/1978
JP	49-043522	11/1974
JP	55-040351	3/1980
JP	61-137120	8/1986
JP	04129965 A *	4/1992
WO	WO 02/18787 A1	3/2002

OTHER PUBLICATIONS

"New Coupler is Both Flexible and Stiff" Pressemelding fra Huco Engineering Industrieds Ltd 5, Apr. 2005.
Japanese Office Action for corresponding Japanese Patent Application No. 2005-275112 mailed Mar. 1, 2011.
Japanese Office Action for corresponding Japanese Patent Application No. 2005-275112 mailed Sep. 6, 2011.

* cited by examiner

Primary Examiner — Charles Freay
Assistant Examiner — Patrick Hamo
(74) *Attorney, Agent, or Firm* — Merchant & Gould P.C.

(57) **ABSTRACT**

The invention relates to a piston engine comprising one or more air/gas-compressing cylinder-piston units, a crank mechanism connected to the piston in the said cylinder or cylinders for movement of the piston in the cylinder, which crank mechanism is drivingly connected to a rotor in an electric motor. The invention also relates to a coupling and a simple connection for a counterweight.
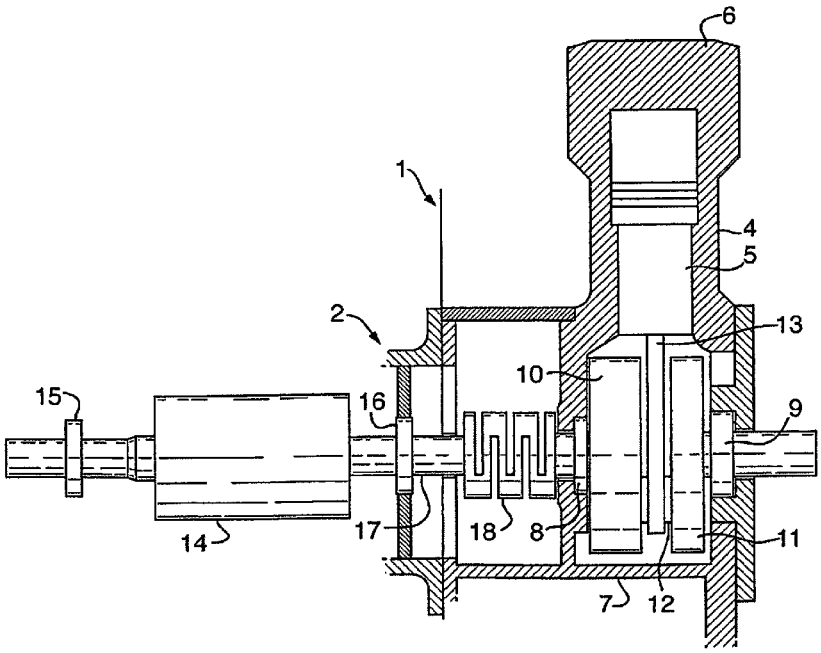
12 Claims, 9 Drawing Sheets