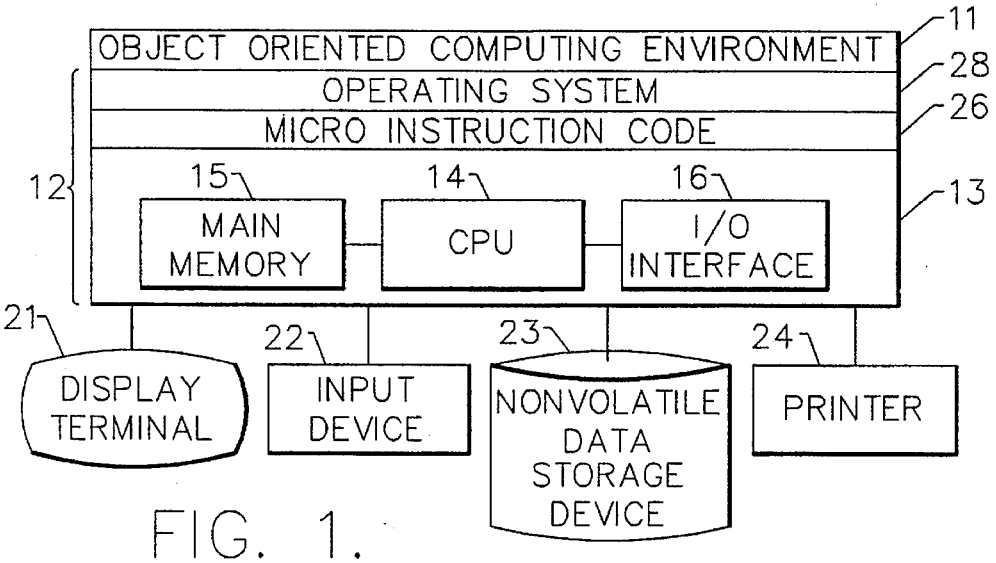
OBJECT ORIENTED COMPUTING ENVIRONMENT
OPERATING SYSTEM
MICRO INSTRUCTION CODE
MAIN MEMORY
CPU
I/O INTERFACE
DISPLAY TERMINAL
INPUT DEVICE
NONVOLATILE DATA STORAGE DEVICE
PRINTER
11
28
26
13
12
15
14
16
21
22
23
24

FIG. 1.

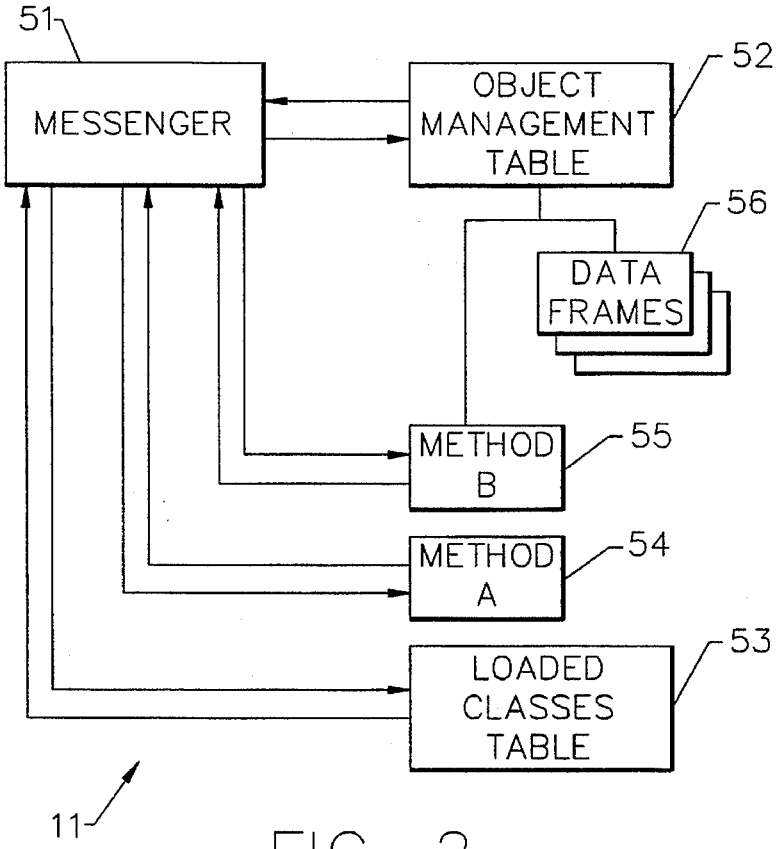
MESSENGER
OBJECT MANAGEMENT TABLE
DATA FRAMES
METHOD B
METHOD A
LOADED CLASSES TABLE
51
52
56
55
54
53
11

FIG. 2.