ROTARY FILLING MACHINE AND FILLING TUBES THEREFOR

Filed Aug. 20, 1957 3 Sheets-Sheet 2

Fig. 4

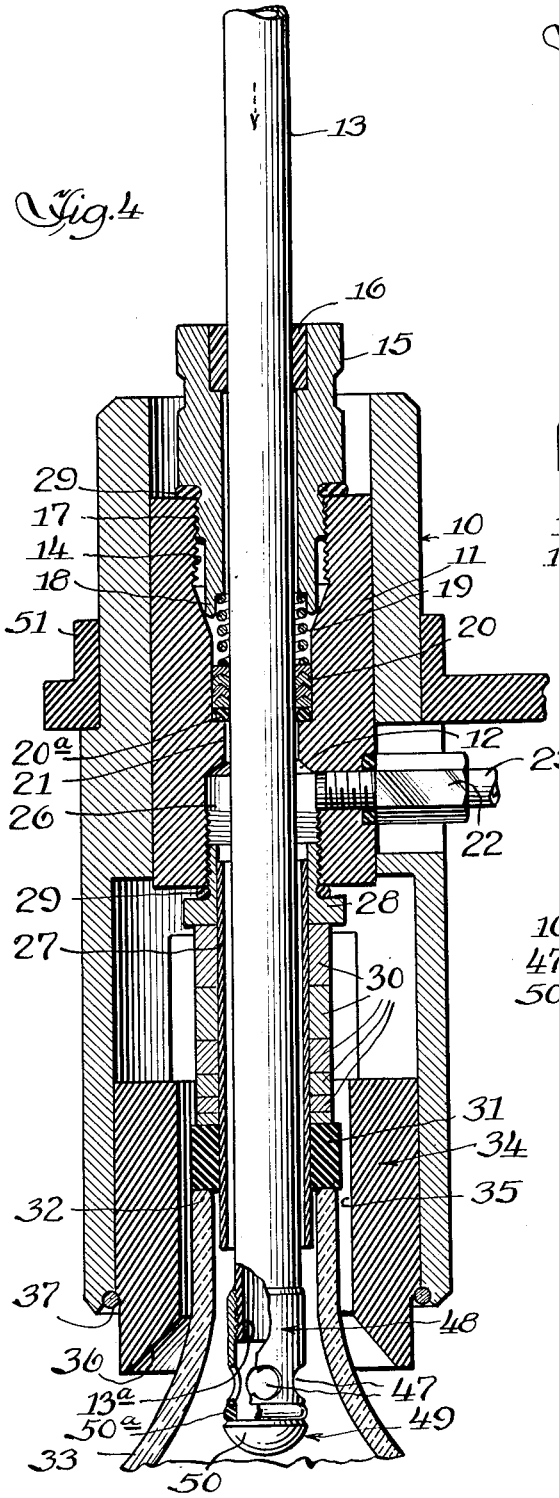

Fig. 5

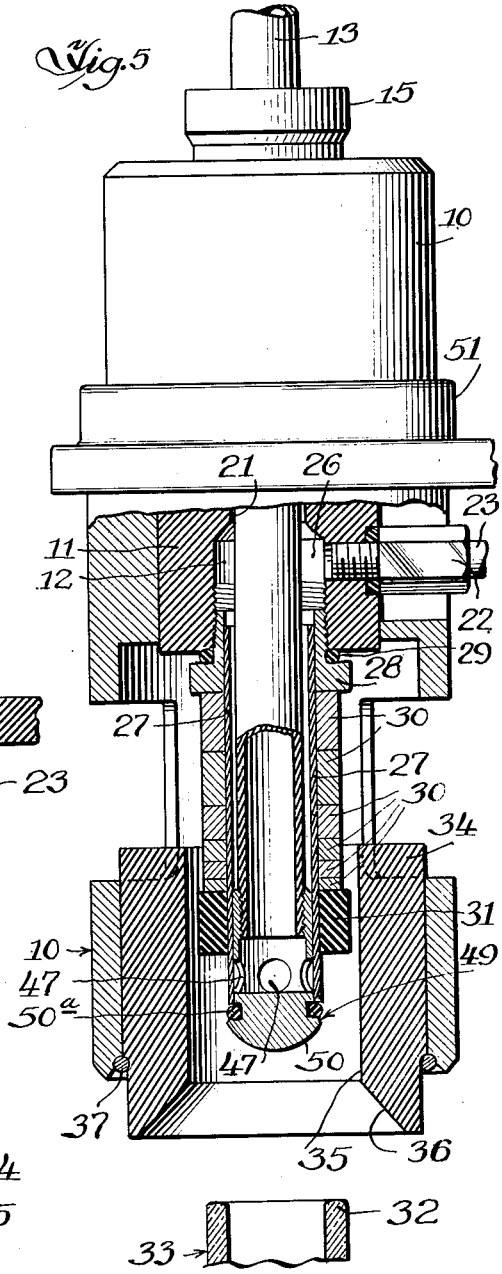

Inventor,
Ivan H. Risser,
by Wilson & Geppert
Attys.