Dec. 6, 1932. L. SWITKES 1,889,765

COMBINATION TRAVELING CASE AND PORTFOLIO

Filed May 15, 1928 2 Sheets-Sheet 1

Fig. 1.

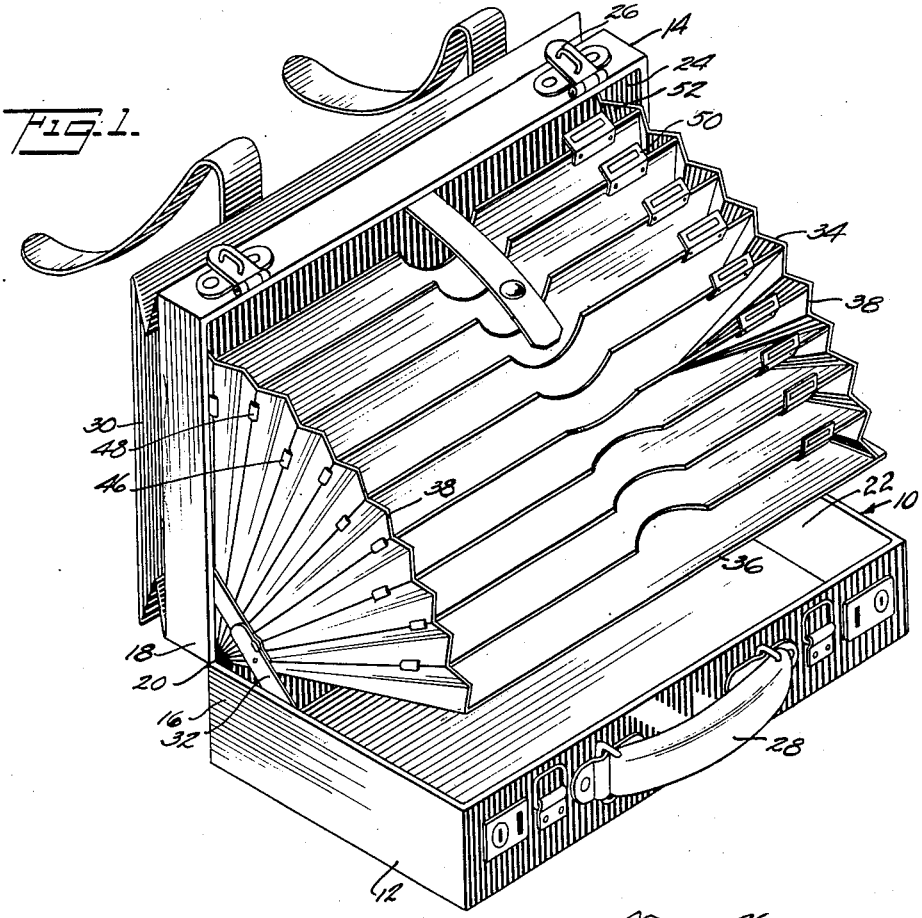

Fig. 2.

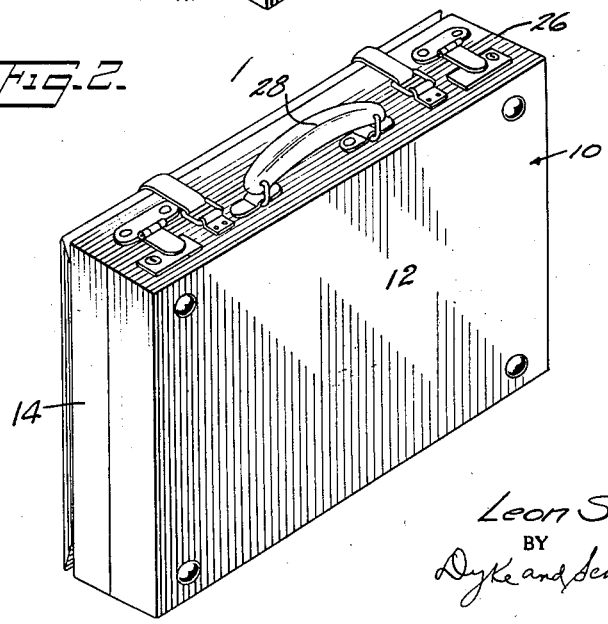

INVENTOR
Leon Switkes
BY
Dyke and Schaines
ATTORNEYS