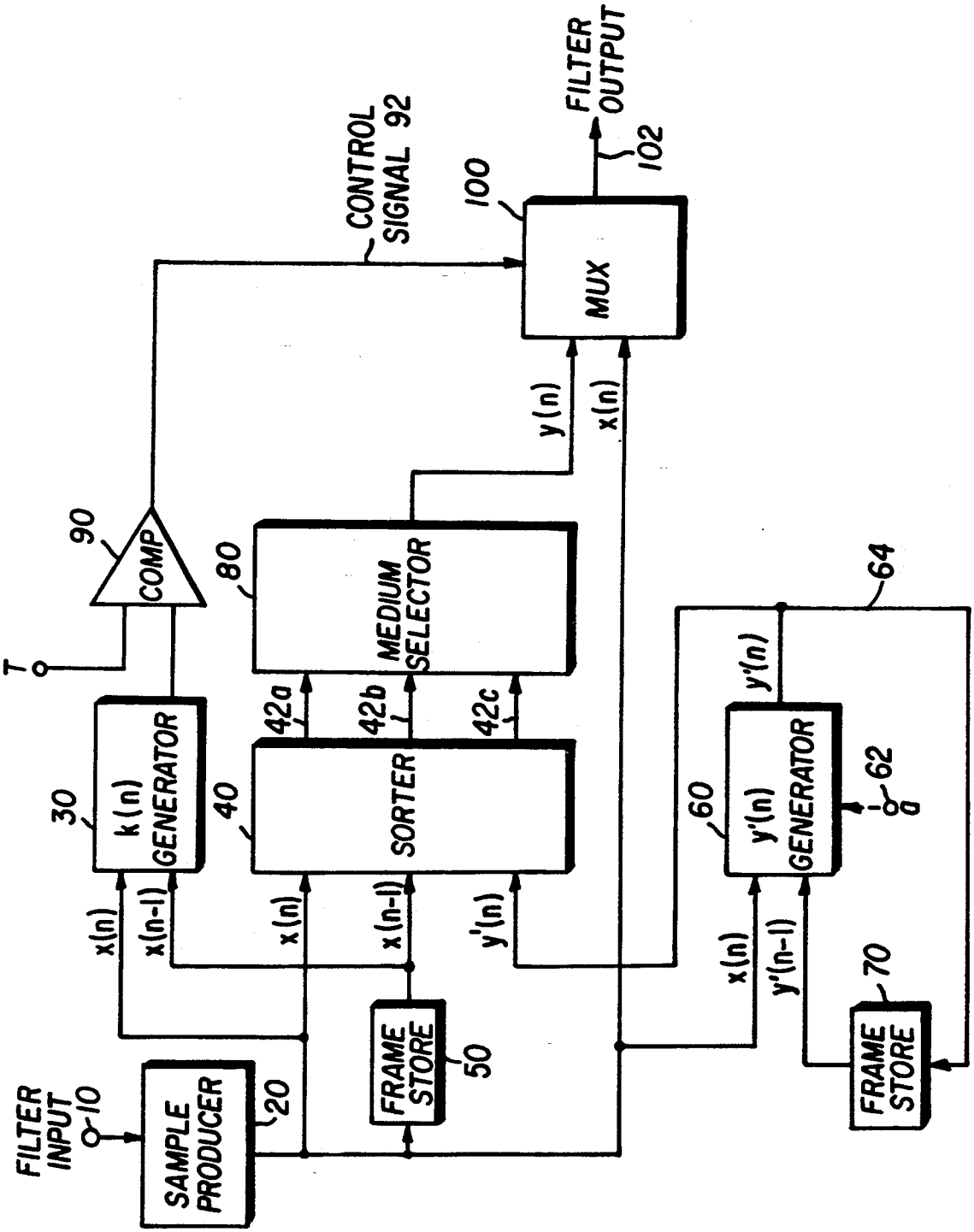
FILTER INPUT
10
SAMPLE PRODUCER
20
x(n)
x(n-1)
30
k(n) GENERATOR
T
90
COMP
CONTROL SIGNAL 92
FRAME STORE
50
x(n)
x(n-1)
40
SORTER
42a
42b
42c
80
MEDIUM SELECTOR
y(n)
x(n)
100
MUX
FILTER OUTPUT
102
y'(n)
60
y'(n) GENERATOR
62
x(n)
y'(n-1)
FRAME STORE
70
y'(n)
64