US005384865A

United States Patent [19]

Loveridge

[11] Patent Number: 5,384,865

[45] Date of Patent: Jan. 24, 1995

[54] **ADAPTIVE, HYBRID MEDIAN FILTER FOR TEMPORAL NOISE SUPPRESSION**

[75] Inventor: **Jennifer C. Loveridge**, North Harrow, England

[73] Assignee: **Eastman Kodak Company**, Rochester, N.Y.

[21] Appl. No.: **891,088**

[22] Filed: **Jun. 1, 1992**

[51] **Int. Cl.**[6] **G06K 9/40**

[52] **U.S. Cl.** **382/54**; 382/41; 348/620

[58] **Field of Search** 382/41, 54; 358/36, 358/105, 167; 364/724.01, 724.17

[56] **References Cited**

U.S. PATENT DOCUMENTS

4,064,530	12/1977	Kaiser et al.	358/36
4,398,210	8/1983	Liu et al.	358/36
4,661,853	4/1987	Roeder et al.	358/105
4,682,230	7/1987	Perlman et al.	358/167
4,737,850	4/1988	Lu et al.	358/167
4,809,069	2/1989	Meyer et al.	358/166
4,827,342	5/1989	Ohta et al.	358/167
4,864,403	9/1989	Chao	358/167
4,953,032	8/1990	Suzaki et al.	358/105
4,954,894	9/1990	Kitaura	358/167

OTHER PUBLICATIONS

"Recursive 2 Dimensional Median Filtered Signals with Impulsive Noise", R. J. Crinon and G. R. Arce, Proceedings of Seventh Annual Micro-Delcon '84, IEEE, Mar. 6, 1984, pp. 117–123.

"The Use of Median Filters for Edge Detection in Noisy Signals", R. A. Stein and T. J. Fowlow, Proceedings of 1985 International Symposium on Circuits and Systems, vol. 3 of 3, IEEE Cat. No. 85CH2114–7, pp. 1331–1334.

"Median Filtering of Television Images", Terence Doyle and Peter Frencken, 1986 IEEE International Conference on Consumer Electronics, Session XIII--Digital TV II, pp. 186–187.

"Digital Image Sequence Processing Using the Median Filter," B. Alp et al., Sahko 63 (1990) 6, 7–8, pp. 26–27, 42–48.

Primary Examiner—Leo H. Boudreau
Assistant Examiner—Chris Kelley
Attorney, Agent, or Firm—David M. Woods

[57] **ABSTRACT**

A median filter is modified for temporal suppression of image grain in a time-varying sequence of images. Successive sets of samples are produced by operation of a sample producer (**20**), each set including a current sample, a sample delayed by a framestore (**50**), and a sample derived from a recursive component generator (**60**). A median selector (**80**) operates upon each set to select the median sample value. Either the median value or the current sample is selected for the filter output, dependent upon an interframe magnitude generated by an adaptive component generator (**30**). Evaluation of interframe magnitude minimizes artifacts in the reproduction of picture information that is temporarily impulsive, while including the recursive component in the median sample set increases the level of grain suppression.
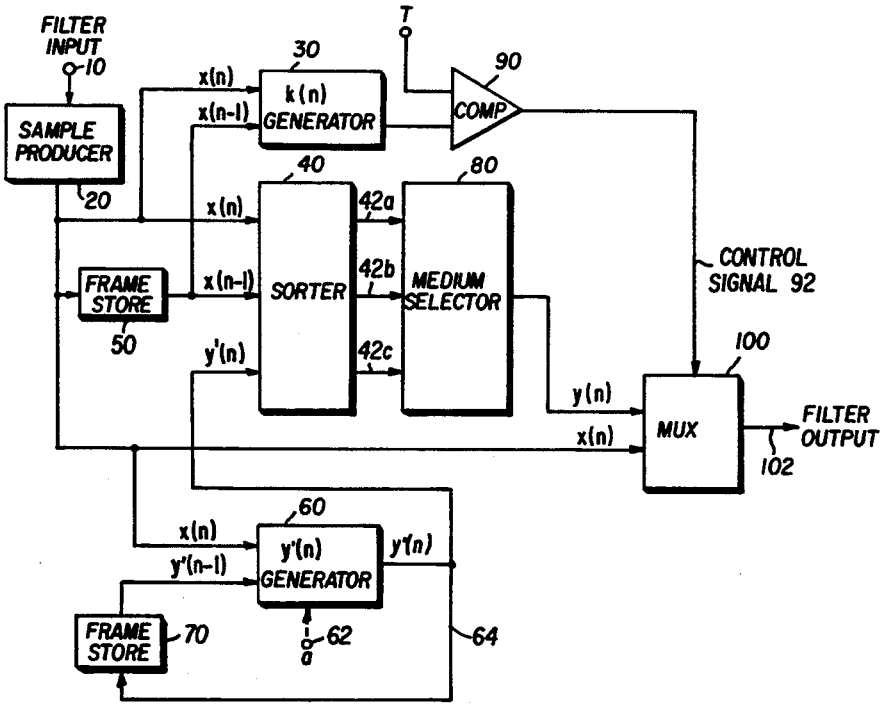
4 Claims, 1 Drawing Sheet