Feb. 5, 1957 D. M. CHAPIN ET AL 2,780,765

SOLAR ENERGY CONVERTING APPARATUS

Filed March 5, 1954

FIG. 1

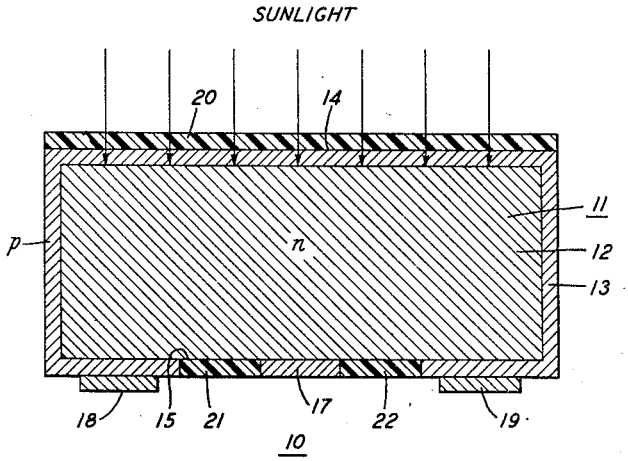

FIG. 2

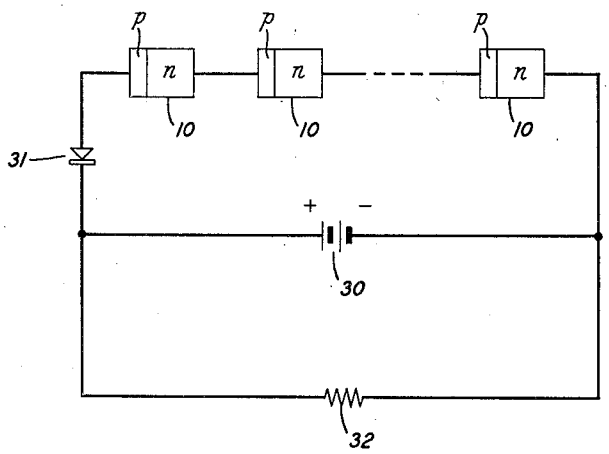

INVENTORS: D. M. CHAPIN
C. S. FULLER
G. L. PEARSON

BY Arthur J. Torsiglieri
ATTORNEY