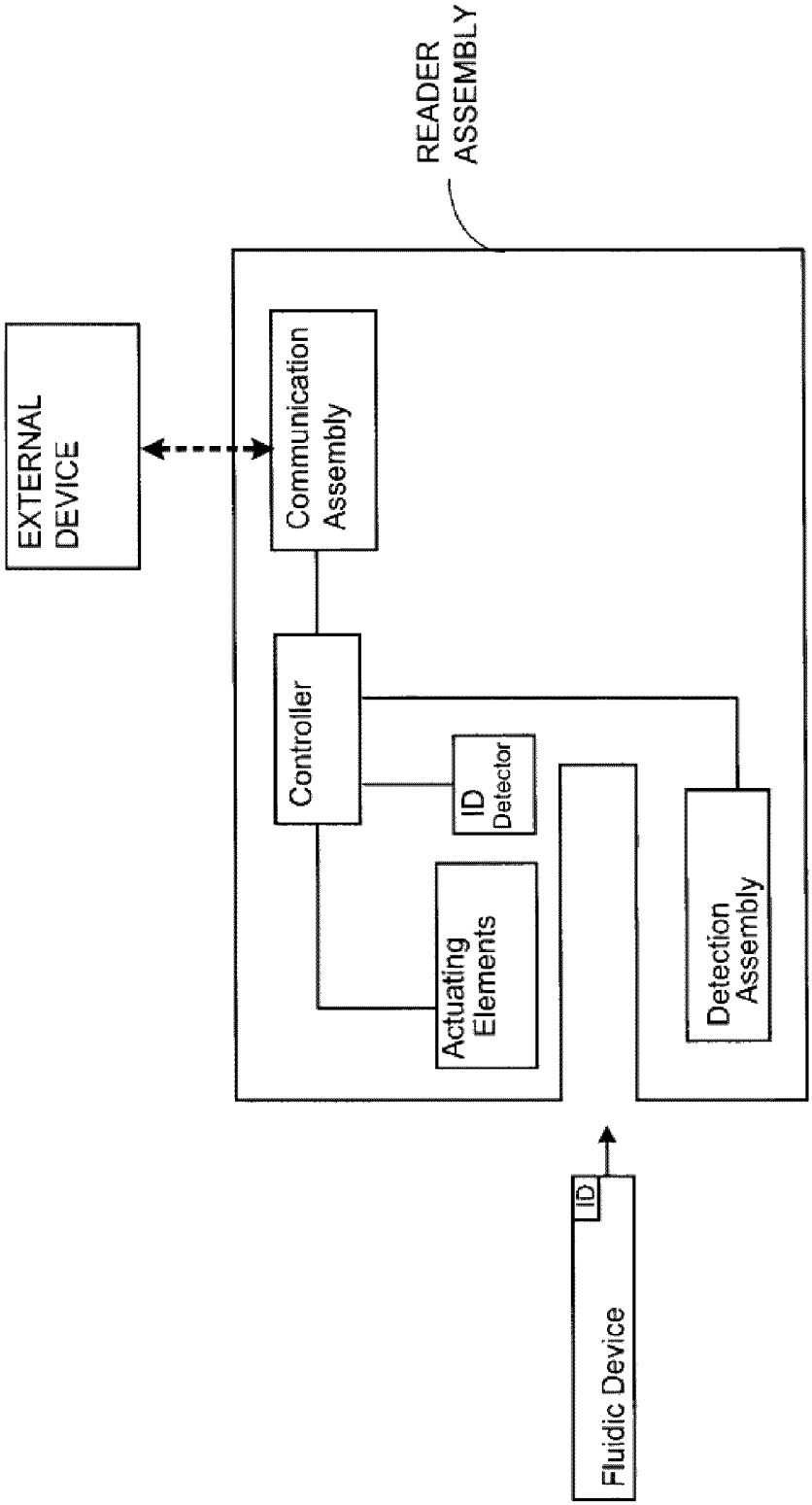
EXTERNAL DEVICE
READER ASSEMBLY
Communication Assembly
Controller
ID Detector
Actuating Elements
Detection Assembly
ID
Fluidic Device

FIG. 1