US008778665B2

(12) **United States Patent**
Gibbons et al.

(10) **Patent No.: US 8,778,665 B2**
(45) **Date of Patent: Jul. 15, 2014**

(54) **DETECTION AND QUANTIFICATION OF ANALYTES IN BODILY FLUIDS**

(75) Inventors: **Ian Gibbons**, Portola Valley, CA (US); **Shaunak Roy**, San Mateo, CA (US); **Edmond Ku**, Sunnyvale, CA (US)

(73) Assignee: **Theranos, Inc.**, Palo Alto, CA (US)

(*) Notice: Subject to any disclaimer, the term of this patent is extended or adjusted under 35 U.S.C. 154(b) by 768 days.

(21) Appl. No.: **12/750,518**

(22) Filed: **Mar. 30, 2010**

(65) **Prior Publication Data**

US 2010/0248277 A1 Sep. 30, 2010

Related U.S. Application Data

(63) Continuation of application No. 11/939,509, filed on Nov. 13, 2007, now abandoned.

(60) Provisional application No. 60/865,805, filed on Nov. 14, 2006.

(51) **Int. Cl.**
C12M 1/34 (2006.01)
B01L 3/00 (2006.01)

(52) **U.S. Cl.**
CPC ***B01L 3/502707*** (2013.01); *B01L 2300/087* (2013.01); *B01L 2300/0874* (2013.01); *B01L 2300/168* (2013.01)
USPC **435/287.2**

(58) **Field of Classification Search**
CPC B01L 3/502707; B01L 2300/0874; B01L 2300/168; B01L 2300/087
See application file for complete search history.

(56) **References Cited**

U.S. PATENT DOCUMENTS

4,003,379	A	1/1977	Ellinwood
4,146,029	A	3/1979	Ellinwood
4,347,176	A	8/1982	Mehta
4,731,726	A	3/1988	Allen
4,793,825	A	12/1988	Benjamin et al.
4,910,131	A	3/1990	Mellman et al.
4,920,213	A	4/1990	Dale et al.
4,946,795	A	8/1990	Gibbons et al.
5,089,229	A	2/1992	Heidt et al.
5,104,813	A	4/1992	Besemer et al.
5,162,237	A	11/1992	Messenger et al.
5,279,607	A	1/1994	Schentag et al.
5,281,395	A	1/1994	Markart et al.
5,380,487	A	1/1995	Choperena et al.

(Continued)

FOREIGN PATENT DOCUMENTS

CN	2559986	7/2003
EP	1498067 A1	1/2005

(Continued)

OTHER PUBLICATIONS

Hendricks et al., An enzyme coupled colorimetric assay for S-adenosylmethionine dependent methyltransferases.*

(Continued)

Primary Examiner — Chris L Chin
Assistant Examiner — Gary E Hollinden

(57) **ABSTRACT**

This invention is in the field of medical devices. Specifically, the present invention provides portable medical devices that allow detection of analytes from a biological fluid. The methods and devices are particularly useful for providing point-of-care testing for a variety of medical applications.
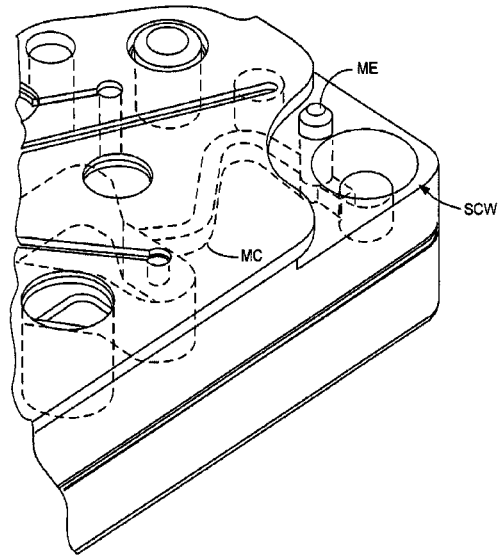
27 Claims, 9 Drawing Sheets