US005173265A

United States Patent [19]

Golias et al.

[11] Patent Number: 5,173,265

[45] Date of Patent: Dec. 22, 1992

[54] MANUALLY OPERATED PUMP INSERTER FOR TEST TUBES

[75] Inventors: Tipton L. Golias; Ovay H. Mayes; Robert J. Sarrine, all of Beaumont, Tex.

[73] Assignee: Helena Laboratories Corporation, Beaumont, Tex.

[21] Appl. No.: 720,372

[22] Filed: Jun. 25, 1991

Related U.S. Application Data

[63] Continuation-in-part of Ser. No. 383,339, Jul. 24, 1989, Pat. No. 5,055,271.

[51] Int. Cl.[5] B01L 9/00

[52] U.S. Cl. 422/99; 422/100; 422/103; 422/104; 73/864.23; 73/864.24

[58] Field of Search 422/99, 100, 103, 104; 73/864.24, 864.23, 864.25, 864.11

[56] References Cited

U.S. PATENT DOCUMENTS

3,650,306	3/1972	Lancaster	422/100
3,687,175	8/1972	Babey	422/99
4,301,116	11/1981	Ida et al.	422/63
4,478,094	10/1984	Salomaa et al.	73/863.32
4,554,839	11/1985	Hewett et al.	73/863.32
4,605,536	8/1986	Kuhnert et al.	422/99
4,779,467	10/1988	Rainin et al.	73/864.17
4,812,293	3/1989	McLaurin et al.	422/102
4,938,929	7/1990	Bost	422/100
4,951,512	8/1990	Mazza et al.	73/864.23

Primary Examiner—James C. Housel
Assistant Examiner—Long V. Le
Attorney, Agent, or Firm—Spencer, Frank & Schneider

[57] ABSTRACT

A manually operated apparatus for attaching one or more pump mechanisms to a like number of sealed test tubes, each test tube sealed by a resilient, puncturable closure. The apparatus includes a frame having a base, a support attached to the frame for releasably supporting one or more pump mechanisms, a test tube holder for releasably holding one or more test tubes, the holder movably engaging and being displaceable on the base of the frame into position in alignment with the support, and a manually operated insertion mechanism, attached to the frame, for displacing the support towards the holder (with test tubes therein), to puncture the closure of a test tube with a pump mechanism. Using the apparatus includes placing one or more test tubes having closures into the holder, displacing the holder into position, placing one or more pump mechanisms in the support, and manually activating the insertion mechanism to puncture the one or more closures with the one or more pump mechanisms.
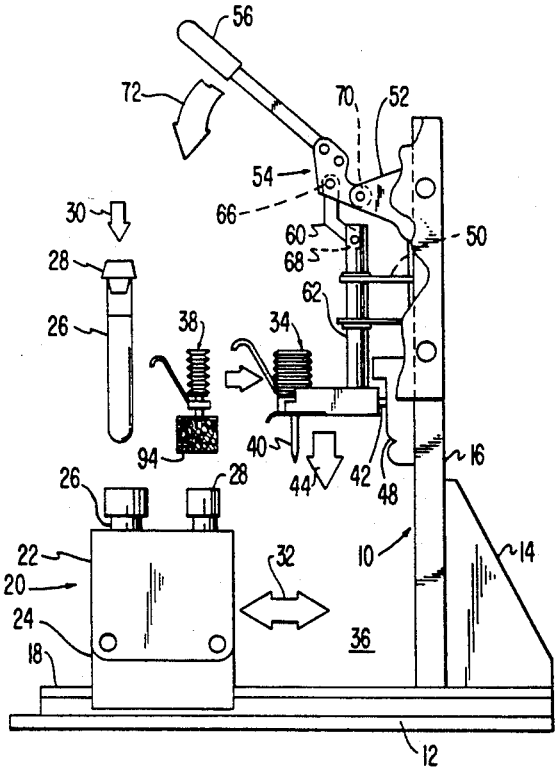
14 Claims, 2 Drawing Sheets