United States Patent [19]

DeFino et al.

[11] **Patent Number: 4,471,165**

[45] **Date of Patent: Sep. 11, 1984**

[54] **PORTABLE KEYBOARD OPERATED TELECOMMUNICATIONS SYSTEM**

[75] Inventors: **John M. DeFino**, Burleson, Tex.; **John W. Stannard**, Los Gatos; **Gary G. Voget**, Cupertino, both of Calif.; **Rufus Coomer**, Fort Worth, Tex.

[73] Assignee: **Pinetree Systems, Inc.**, Grand Prairie, Tex.

[21] Appl. No.: **202,020**

[22] Filed: **Oct. 28, 1980**

[51] **Int. Cl.**[3] **G06F 3/023**; H04M 11/08

[52] **U.S. Cl.** ..... **179/2 A**; 179/2 C

[58] **Field of Search** ..... 179/2 DP, 2 R, 2 C, 179/2 AM, 2 CA, 2 A

[56] **References Cited**

U.S. PATENT DOCUMENTS

3,507,997	4/1970	Weitbrecht	179/2 DP
3,516,062	6/1970	Spraker	179/2 DP X
3,675,513	7/1972	Flanagan et al.	179/84 VF
3,746,793	7/1973	Sachs et al.	179/2 DP
3,746,794	7/1973	Stifle et al.	179/2 DP
3,760,171	9/1973	Wang et al.	235/156
3,870,821	3/1975	Steury	179/2 DP
3,896,267	7/1975	Sachs et al.	179/2 TV
3,976,840	8/1976	Cleveland et al.	179/2 DP
4,007,443	2/1977	Bromberg et al.	364/900
4,012,594	3/1977	Paller	179/2 DP
4,012,599	3/1977	Meyer	179/84 VF
4,038,651	7/1977	McGraw	179/2 DP X
4,268,721	5/1981	Nielson et al.	179/2 C
4,291,198	9/1981	Anderson et al.	179/2 DP
4,326,102	4/1982	Culp et al.	179/2 C
4,375,060	2/1983	Horyu	340/365 R

FOREIGN PATENT DOCUMENTS

2749923	5/1979	Fed. Rep. of Germany	179/2 DP
44283	3/1980	Japan	179/2 A

OTHER PUBLICATIONS

Model-DP 2001 Data Prompter, brochure, Pinetree Systems, Inc., 1979.

Primary Examiner—Thomas W. Brown

Attorney, Agent, or Firm—Richards, Harris & Medlock

[57] **ABSTRACT**

A portable handheld battery operated telecommunications terminal (**10**) is acoustically coupled to a telephone hand set for the transmission and reception of alphanumeric information over ordinary telephone lines. A standard typewriter ASCII keyboard (**34**) enables the encoding of messages for transmission on a character by character basis (Baudot code) or the entire message to a second communications terminal (**10**) with the same transmission protocol. A visual display (**32**) provides a display of data for editing the encoded message prior to transmission and for display of a message received from a second communications terminal (**10**). A microprocessor (**50**) is programmed by processor instructions stored in EPROMs (**66**) and (**68**) for controlling operation of the communications terminal (**10**) from entries from the keyboard (**34**). A transmit audio transducer (**76**) and receive audio transducer (**84**) transmit and receive audio tones over ordinary telephone lines in the frequency shift key transmission mode in response to pulses from the programmed microprocessor (**50**). Random access memories (**62**) and (**64**) enable the user to store an entire message for editing prior to transmission, to enter blocks of alphanumeric information for subsequent transmission, and to store a received message for redisplay of the message in the visual display (**32**).
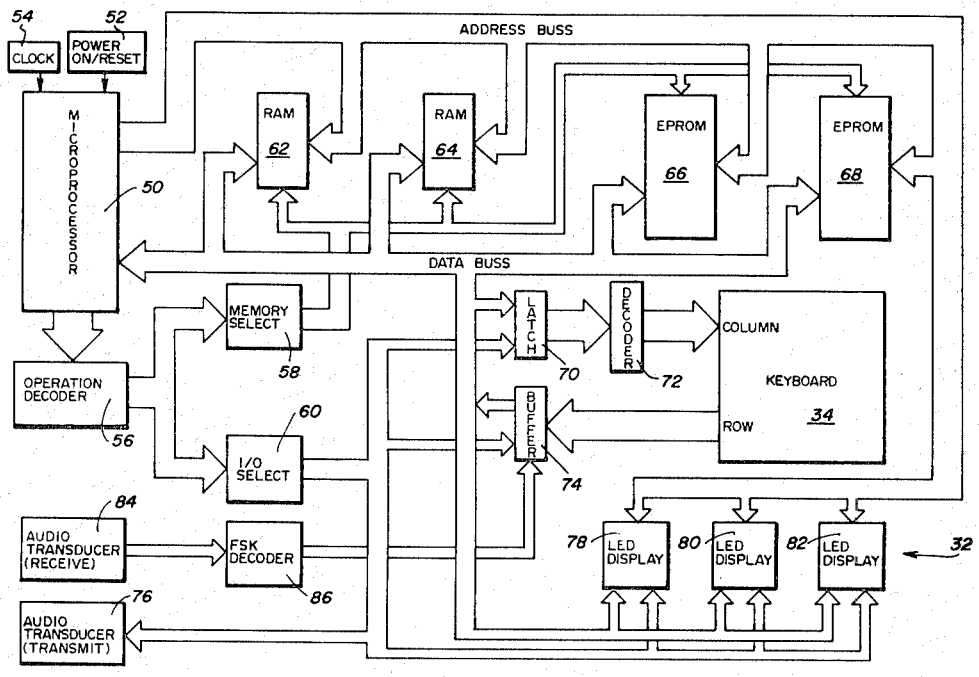
1 Claim, 8 Drawing Figures