Feb. 7, 1961 D. J. REYNOLDS 2,970,565

MOSQUITO EGG HARVESTER

Filed Jan. 27, 1960

Fig. 2

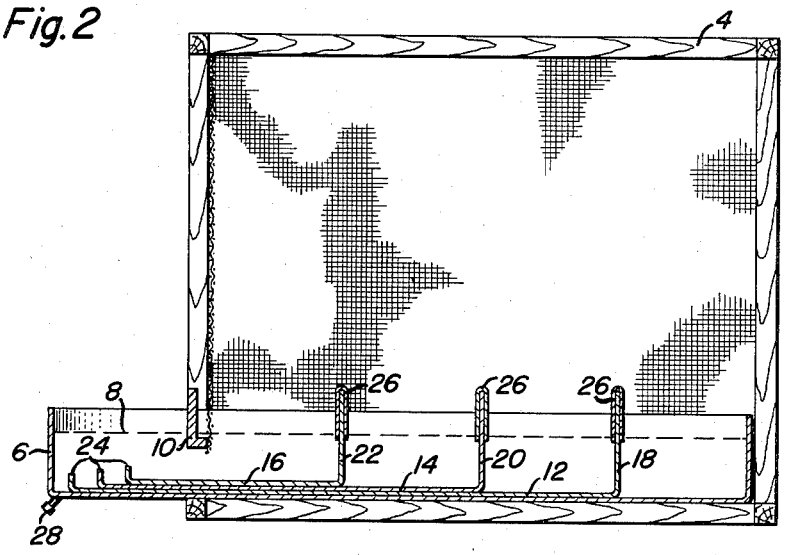

Fig. 1

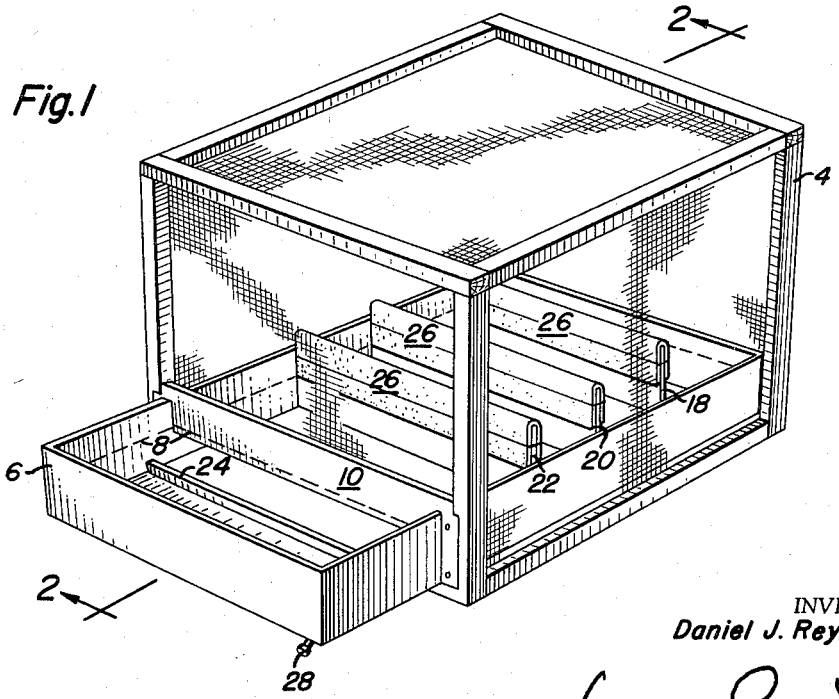

INVENTOR
Daniel J. Reynolds

BY George Renehan

ATTORNEY