219-121 SR

6/2/87 XR 4,669,465

United States Patent [19]

Moore et al.

[11] **Patent Number: 4,669,465**

[45] **Date of Patent: Jun. 2, 1987**

[54] **LASER CATHETER CONTROL AND CONNECTING APPARATUS**

[75] Inventors: **Gary L. Moore**, Minneapolis; **Bruce H. Neilson**, Brooklyn Park; **James V. Kauphusman**, Champlin; **James S. Sharrow**, St. Louis Park, all of Minn.

[73] Assignee: **GV Medical, Inc.**, Minneapolis, Minn.

[21] Appl. No.: **679,633**

[22] Filed: **Dec. 10, 1984**

[51] **Int. Cl.**[4] **A61B 17/36**

[52] **U.S. Cl.** ..... **128/303.1**; 128/395; 128/398; 219/121 L; 219/121 LA

[58] **Field of Search** ..... 128/303.1, 395–398, 128/303.15, 344, 6–8, 656, 658; 219/121 L, 121 LA

[56] **References Cited**

U.S. PATENT DOCUMENTS

2,857,915	10/1958	Sheridan	128/658
3,399,668	9/1968	Lundgren	128/658
3,801,766	4/1974	Morrison, Jr.	128/303.14
3,877,838	4/1975	Choy	128/344
4,006,736	2/1977	Kranys et al.	128/655
4,026,284	5/1977	Boehringer	128/205.24
4,060,724	11/1977	Heine et al.	128/398
4,146,019	3/1979	Bass et al.	128/395
4,175,545	11/1979	Termanini	128/6
4,279,252	7/1981	Martin	128/658
4,418,688	12/1983	Loeb	128/6
4,422,457	12/1983	Hattori	128/6
4,438,765	3/1984	Wilinsky	128/395
4,445,892	5/1984	Hussein et al.	128/303.1
4,448,188	5/1984	Loeb	128/395
4,470,414	9/1984	Imagawa et al.	128/303.1

FOREIGN PATENT DOCUMENTS

0074914	3/1983	European Pat. Off.	128/303.1
2647618	10/1976	Fed. Rep. of Germany	128/303.1
2945080	5/1981	Fed. Rep. of Germany	128/303.1

Primary Examiner—Kyle L. Howell
Assistant Examiner—Ruth S. Smith
Attorney, Agent, or Firm—Orrin M. Haugen; Thomas J. Nikolai; Frederick W. Niebuhr

[57] **ABSTRACT**

A multi-lumen laser enhanced transluminal angioplasy catheter apparatus provided with a balloon or expandable member which is coupled to a catheter connecting manifold member providing a plurality of inlet ports for handling and delivering procedure-dependent materials. A laser fiber advance unit, in turn, controllably advances and couples the lasing fiber between the catheter manifold and a laser control unit. The fiber advance unit provides interlock means preventing actuation or operation of the control unit, unless and until the tip of the laser beam transmitting fiber extends beyond the distal end of the catheter, and means are provided for controlling the insertion extent of advancement of the laser fiber and its transmitting tip into the body of the catheter.
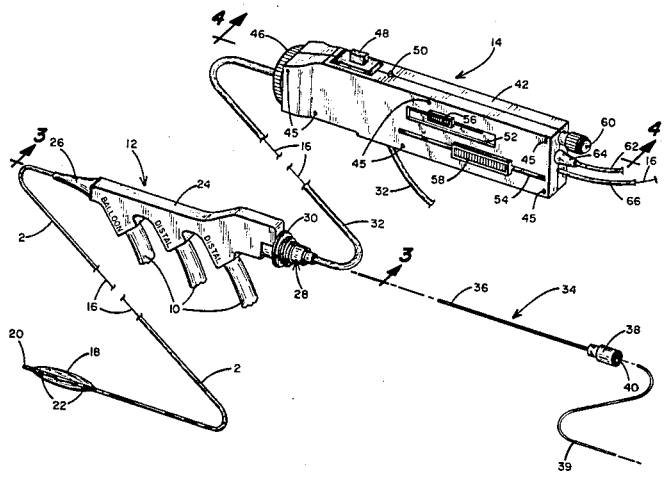
19 Claims, 8 Drawing Figures