US008564965B2

(12) **United States Patent**
Sloey et al.

(10) **Patent No.: US 8,564,965 B2**
(45) **Date of Patent: Oct. 22, 2013**

(54) **COMPACT EJECTABLE COMPONENT ASSEMBLIES IN ELECTRONIC DEVICES**

(75) Inventors: **Jason Sloey**, San Jose, CA (US); **Michelle Yu**, Oakland, CA (US)

(73) Assignee: **Apple Inc.**, Cupertino, CA (US)

(*) Notice: Subject to any disclaimer, the term of this patent is extended or adjusted under 35 U.S.C. 154(b) by 415 days.

(21) Appl. No.: **12/793,980**

(22) Filed: **Jun. 4, 2010**

(65) **Prior Publication Data**

US 2011/0255252 A1 Oct. 20, 2011

Related U.S. Application Data

(60) Provisional application No. 61/325,622, filed on Apr. 19, 2010.

(51) **Int. Cl.**
H05K 5/00 (2006.01)
H05K 1/14 (2006.01)

(52) **U.S. Cl.**
USPC **361/752**; 361/737; 361/741

(58) **Field of Classification Search**
None
See application file for complete search history.

(56) **References Cited**

U.S. PATENT DOCUMENTS

6,075,706	A *	6/2000	Learmonth et al.	361/737
6,330,151	B1 *	12/2001	Bates, III	361/679.02
6,717,805	B2 *	4/2004	Liu et al.	361/679.32
7,442,086	B1 *	10/2008	Chang	439/630
7,458,857	B2 *	12/2008	Lin et al.	439/630
7,568,928	B2 *	8/2009	Hou et al.	439/188
8,102,657	B2 *	1/2012	Hiew et al.	361/737
2004/0047134	A1 *	3/2004	Liu et al.	361/736
2008/0064239	A1 *	3/2008	Li	439/152
2008/0090446	A1 *	4/2008	Lamont et al.	439/351
2008/0165508	A1 *	7/2008	Wang et al.	361/728
2009/0023319	A1 *	1/2009	Hou et al.	439/159
2009/0047835	A1 *	2/2009	Lin	439/632
2009/0081890	A1 *	3/2009	Ogatsu	439/64

* cited by examiner

Primary Examiner — Hoa C Nguyen
Assistant Examiner — Xanthia C Cunningham
(74) *Attorney, Agent, or Firm* — Brownstein Hyatt Farber Schreck, LLP

(57) **ABSTRACT**

Electronic devices are provided with ejectable component assemblies. Each ejectable component assembly may include a tray that can be loaded with one or more types of removable module, such as a mini-SIM card and a micro-SIM card, and inserted into the device. Each assembly may also include a base coupled to a circuit board for electrically coupling with the removable module, a cage for biasing the module down against the base, and a guide for retaining the module at a functional insertion position within the device.
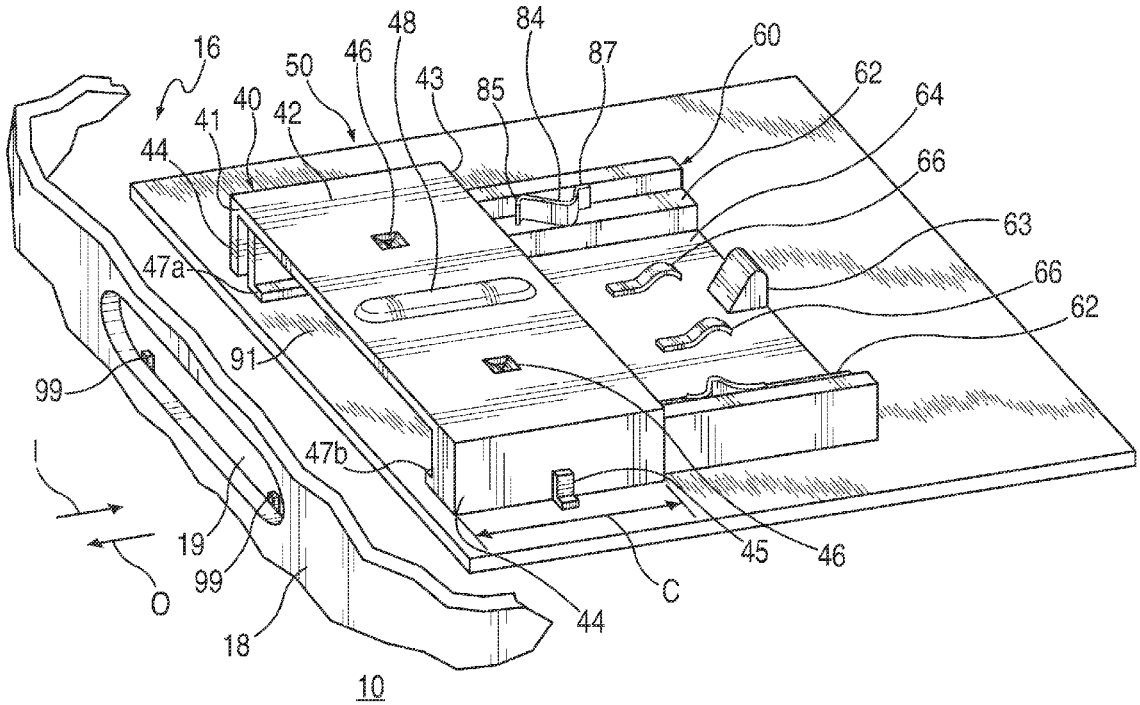
20 Claims, 11 Drawing Sheets