Oct. 13, 1925.

1,557,165

E. G. HOOPER

PAVEMENT FOR HIGHWAYS

Filed Nov. 1, 1922

Fig. 1.

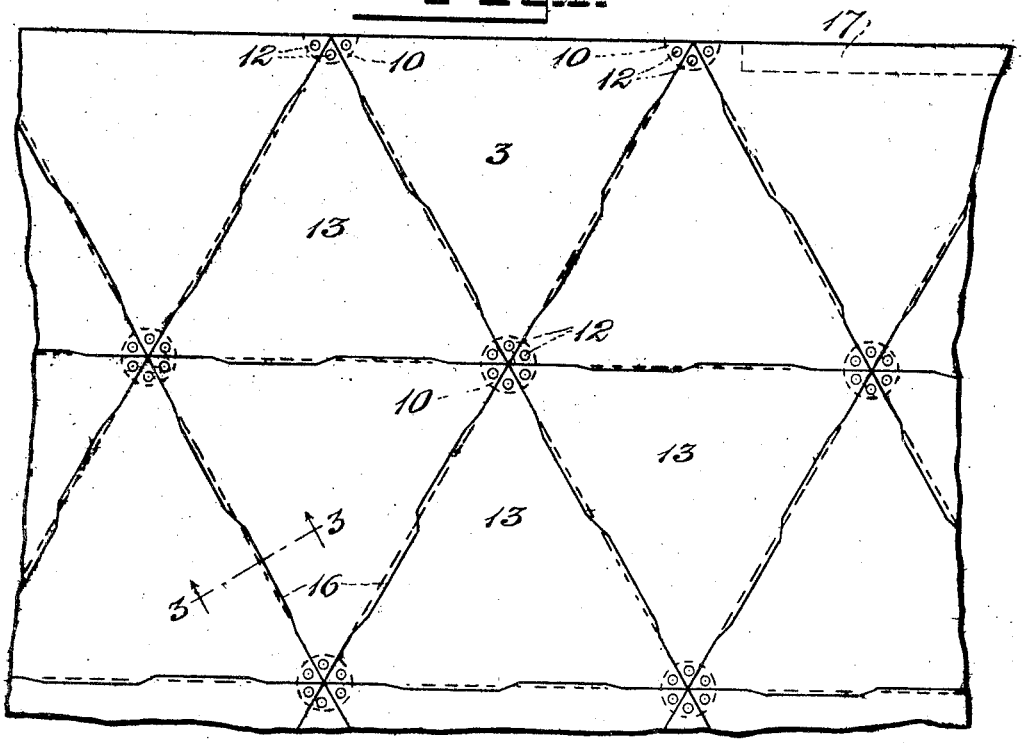

Fig. 4.

Fig. 2.

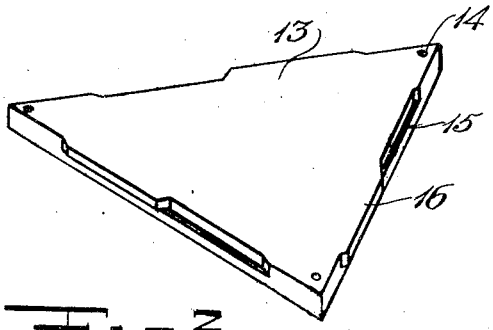

Fig. 6.

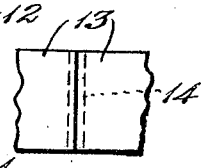

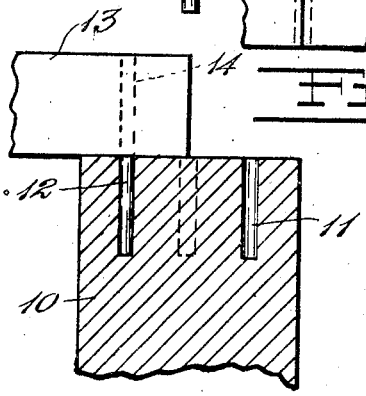

Fig. 3.

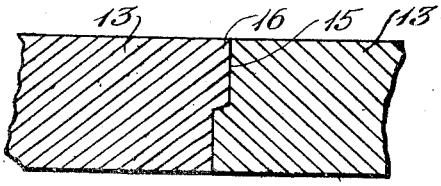

Fig. 5.

INVENTOR

Elmer G. Hooper,

BY H. D. Donnelly

ATTORNEY