US007352565B2

(12) **United States Patent**
Yin

(10) **Patent No.: US 7,352,565 B2**
(45) **Date of Patent: Apr. 1, 2008**

(54) **PORTABLE COMPUTER SYSTEM**

(75) Inventor: **Memphis-Zhihong Yin**, Tomball, TX (US)

(73) Assignee: **Hewlett-Packard Development Company, L.P.**, Houston, TX (US)

(*) Notice: Subject to any disclaimer, the term of this patent is extended or adjusted under 35 U.S.C. 154(b) by 27 days.

(21) Appl. No.: **10/952,212**

(22) Filed: **Sep. 28, 2004**

(65) **Prior Publication Data**

US 2006/0067037 A1 Mar. 30, 2006

(51) **Int. Cl.**
G06F 1/16 (2006.01)

(52) **U.S. Cl.** **361/683**; 312/223.2; 248/917

(58) **Field of Classification Search** 361/686, 361/679–683, 724, 725; 312/223.1, 223.2; 248/917–923

See application file for complete search history.

(56) **References Cited**

U.S. PATENT DOCUMENTS

5,247,285 A 9/1993 Yokota et al.
5,627,450 A 5/1997 Ryan et al.
6,076,787 A 6/2000 Troyer
6,185,094 B1 2/2001 Ruch et al.
6,208,508 B1 3/2001 Ruch et al.
6,256,192 B1 7/2001 Shannon
6,256,193 B1 * 7/2001 Janik et al. 361/683
6,353,529 B1 * 3/2002 Cies 361/681
6,480,376 B1 11/2002 Nguyen et al.
6,583,985 B2 6/2003 Nguyen et al.
6,825,415 B1 * 11/2004 Chen et al. 174/63
6,912,121 B2 * 6/2005 Karidis et al. 361/681
2003/0103328 A1 6/2003 Hillis et al.

FOREIGN PATENT DOCUMENTS

EP 1333356 8/2003

* cited by examiner

Primary Examiner—Jayprakash Gandhi
Assistant Examiner—Anthony Q Edwards

(57) **ABSTRACT**

A portable computer system comprising a main chassis with a front edge, a rear edge, an upper surface, and a lower surface. A support chassis is rotatably connected to the front edge of the main chassis. A display panel is rotatably connected to the rear edge of the main chassis.
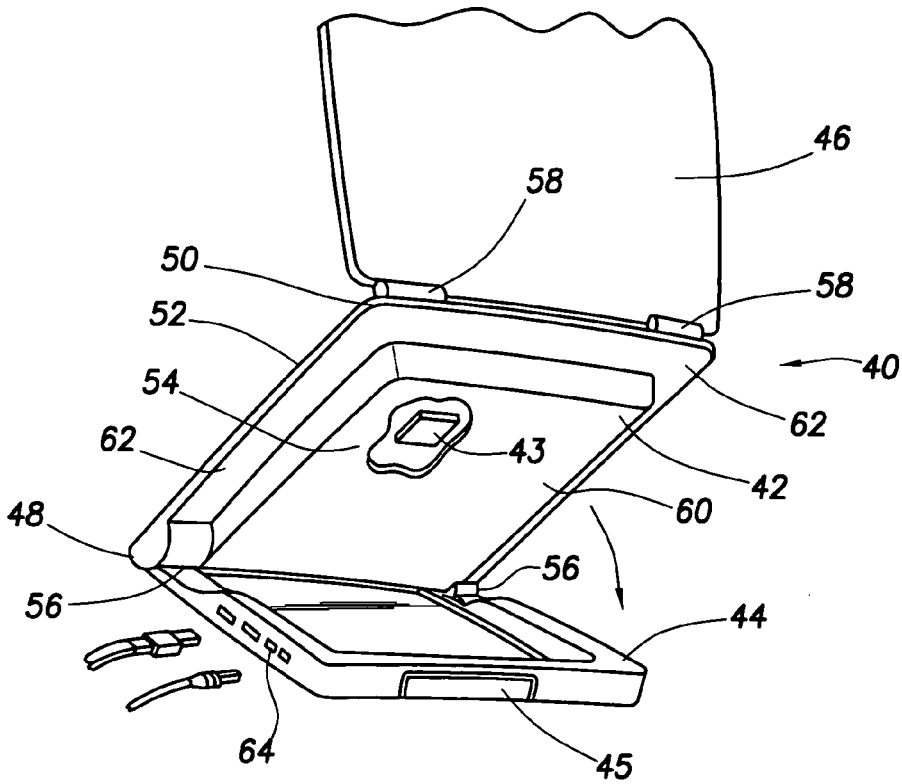
19 Claims, 3 Drawing Sheets