US009345265B2

(12) **United States Patent**
**Campbell et al.**

(10) **Patent No.: US 9,345,265 B2**
(45) **Date of Patent: May 24, 2016**

(54) **SUSHI MACHINE**

(71) Applicant: **2 Minute Sushi LLC**, Grand Junction, CO (US)

(72) Inventors: **Deborah Ann Campbell**, Grand Junction, CO (US); **Charles Everard Campbell**, Grand Junction, CO (US); **Tia Nadine Salazar**, Grand Junction, CO (US); **Ian Levon Charles Campbell**, Grand Junction, CO (US)

(73) Assignee: **2 MINUTE SUSHI LLC**, Grand Junction, CO (US)

( * ) Notice: Subject to any disclaimer, the term of this patent is extended or adjusted under 35 U.S.C. 154(b) by 0 days.

(21) Appl. No.: **14/327,929**

(22) Filed: **Jul. 10, 2014**

(65) **Prior Publication Data**

US 2015/0027323 A1 Jan. 29, 2015

**Related U.S. Application Data**

(60) Provisional application No. 61/845,137, filed on Jul. 11, 2013, provisional application No. 61/920,637, filed on Dec. 24, 2013.

(51) **Int. Cl.**

| | |
|---|---|
| ***A21C 9/06*** | (2006.01) |
| ***A23P 1/08*** | (2006.01) |
| ***A47J 43/20*** | (2006.01) |

(52) **U.S. Cl.**

CPC . ***A23P 1/086*** (2013.01); ***A47J 43/20*** (2013.01)

(58) **Field of Classification Search**

CPC ..... A23P 1/086; A47J 43/20
USPC ..... 99/450.6, 450.1, 450.7, 353, 494; 425/110, 319, 383, 436 R, 112, 308
See application file for complete search history.

(56) **References Cited**

U.S. PATENT DOCUMENTS

| | | | | |
|---|---|---|---|---|
| 2,415,910 A * | 2/1947 | Roes | ..... | 131/47 |
| 5,381,728 A * | 1/1995 | Tateno | ..... | 99/450.1 |
| 5,634,396 A * | 6/1997 | Isobe et al. | ..... | 99/450.6 |
| 2009/0050001 A1* | 2/2009 | Boegli | ..... | 101/6 |

* cited by examiner

*Primary Examiner* — Phuong Nguyen

(57) **ABSTRACT**

An apparatus for forming filled rolls such as sushi and California rolls. The apparatus contains two rollers connected by a gearing mechanism to aid in creating rolls quickly. The rolls are formed on a continuous mat wrapped around the rollers. The driving roller may be mounted in an adjustable slot to allow the user to make different sized rolls.
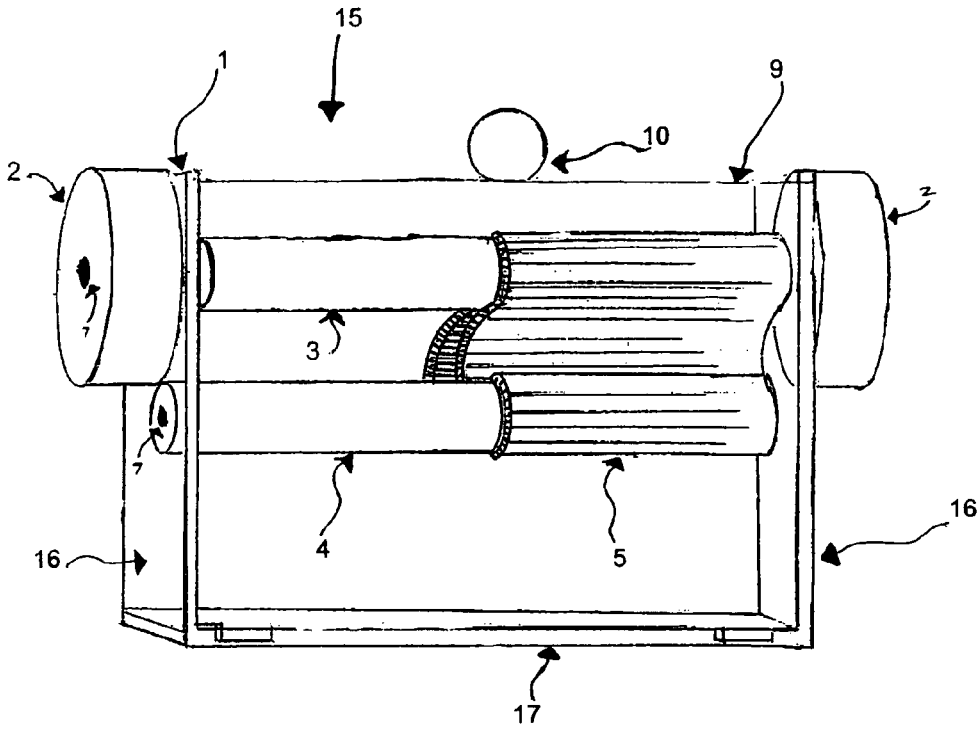
**18 Claims, 4 Drawing Sheets**