FIG. 1

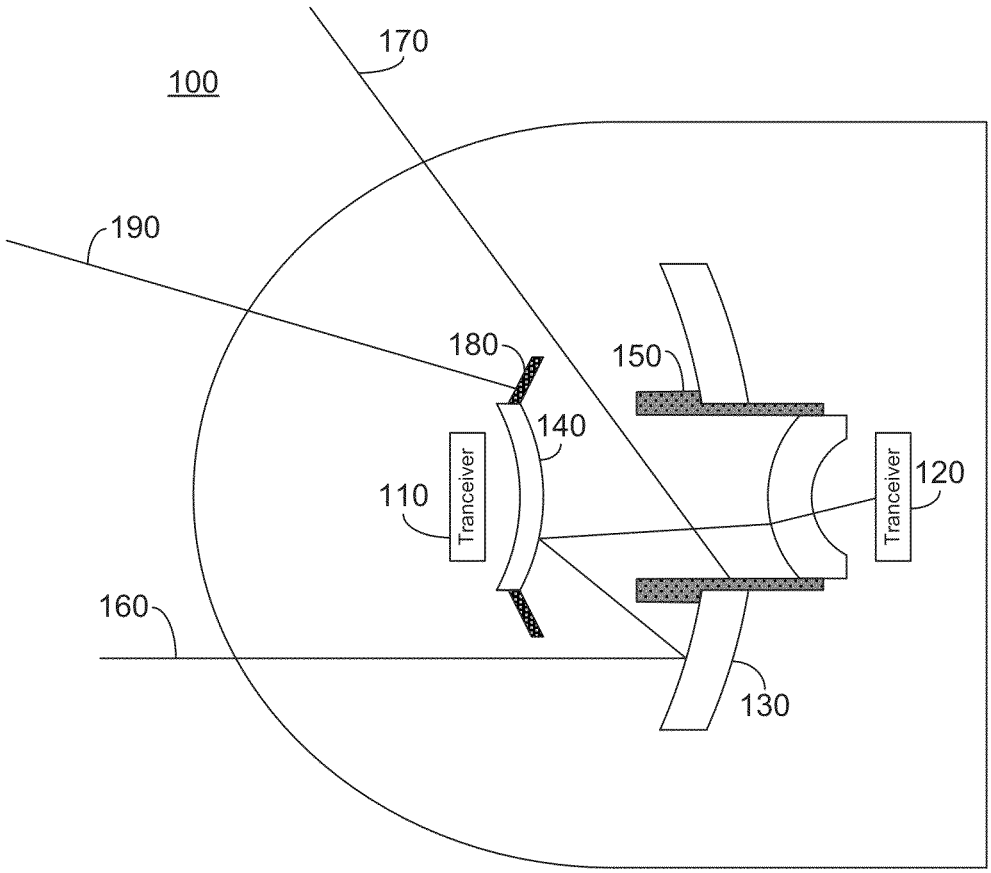
100
170
190
180
150
140
110
Tranceiver
120
Tranceiver
160
130