US009638365B1

(12) **United States Patent**
Reviel

(10) **Patent No.: US 9,638,365 B1**
(45) **Date of Patent: May 2, 2017**

(54) **MULTIPURPOSE CONNECTOR SYSTEM**

(71) Applicant: **Marc Reviel**, Cedar Park, TX (US)

(72) Inventor: **Marc Reviel**, Cedar Park, TX (US)

(*) Notice: Subject to any disclaimer, the term of this patent is extended or adjusted under 35 U.S.C. 154(b) by 899 days.

(21) Appl. No.: **13/935,907**

(22) Filed: **Jul. 5, 2013**

(51) **Int. Cl.**
F16L 21/06 (2006.01)
F16B 7/04 (2006.01)
F16L 47/28 (2006.01)
F16L 41/08 (2006.01)

(52) **U.S. Cl.**
CPC ***F16L 21/06*** (2013.01); ***F16B 7/048*** (2013.01); ***F16L 41/08*** (2013.01); ***F16L 47/28*** (2013.01)

(58) **Field of Classification Search**
CPC F16L 21/06; F16L 41/001; F16L 41/004; F16L 41/02; F16L 41/021; F16L 41/08; F16L 47/26; F16L 47/28; F16L 47/30; F16L 47/32; F16B 7/04; F16B 7/044; F16B 7/048; F16B 12/40; F16B 12/42; F16B 2012/446; A47B 13/003; A47B 2097/005; E04G 7/02; E04G 7/12; E04G 7/14; E04G 7/28; E04G 2007/285; E04B 1/2403; E04B 2001/2406; F16M 11/02; F16M 11/20
USPC 135/909; 285/125.1, 126.1, 129.1, 130.1, 285/133.11, 179, 179.1, 406, 420; 403/169, 170, 300, 403
See application file for complete search history.

(56) **References Cited**

U.S. PATENT DOCUMENTS

20,717 A 6/1858 Kahnweiler
927,219 A * 7/1909 Burns H02G 3/06 16/2.1
960,744 A * 6/1910 Vogel H02G 3/06 138/89
1,112,953 A * 10/1914 Webb H02G 3/06 200/DIG. 24
1,150,781 A * 8/1915 Louden E04B 1/1903 135/909
1,362,718 A * 12/1920 McNamara E03C 1/122 285/125.1
1,370,224 A * 3/1921 Redding F16K 27/105 228/164
1,423,309 A * 7/1922 Curtis H02G 3/185 138/106
1,650,233 A * 11/1927 Plunkett H02G 3/0616 174/541
1,767,226 A * 6/1930 Pearson E05B 65/006 220/3.8
1,816,670 A * 7/1931 Church H02G 3/06 285/179.1

(Continued)

FOREIGN PATENT DOCUMENTS

DE 20 2005 013 777 U1 * 12/2005
EP 1293686 B1 9/2002

Primary Examiner — Robert Canfield
(74) *Attorney, Agent, or Firm* — Scheinberg & Associates, P.C.

(57) **ABSTRACT**

A multipurpose connector system for securing various planar and rigid structures to cylindrical bodies, such as tubes and pipes wherein the connector system comprises a versatile arrangement of connection capabilities that allows for the tight interconnections, adaptability, and internal system to carry and protect wires. The system includes the ability to connect a planar or rigid body, such as a VESA display screen, to a rod or tube system using a combination of eight independent connectors that allow for a large variety of connection arrangements.
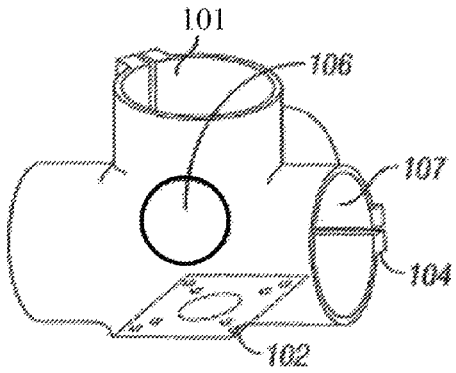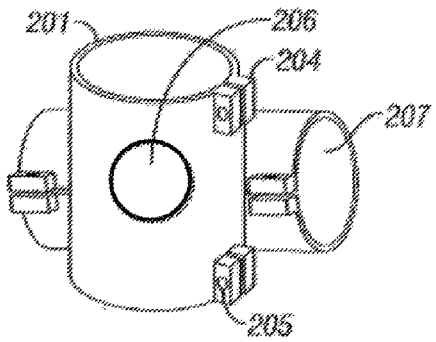
9 Claims, 8 Drawing Sheets