United States Patent [19]

Hilborn et al.

[11] **3,833,765**

[45] **Sept. 3, 1974**

[54] **KEYBOARD AND MESSAGE SYSTEM**

[75] Inventors: **Edwin H. Hilborn,** Framingham; **Joseph D. Brabel,** Concord; **Kenneth J. Bray,** Medway, all of Mass.

[73] Assignee: **The United States of America as represented by the Secretary of the Department of Transportation,** Washington, D.C.

[22] Filed: **Jan. 30, 1973**

[21] Appl. No.: **327,953**

[52] **U.S. Cl.** ..... **178/79,** 178/17 C, 340/365 R

[51] **Int. Cl.** **G08b 1/00,** H04b 1/00, H04l 15/02

[58] **Field of Search** ..... 178/17 C, 79, 80, 81, 17.5; 340/365, 172.5; 235/145 R

[56] **References Cited**

UNITED STATES PATENTS

3,361,875	1/1968	Banfalvi et al.	178/79
3,491,355	1/1970	Harrold	178/79
3,493,922	2/1970	Laas	340/365
3,772,597	11/1973	Stover	178/17 C

Primary Examiner—Thomas A. Robinson

Attorney, Agent, or Firm—Herbert E. Farmer; Nathan Edelberg; Harold P. Deeley, Jr.

[57] **ABSTRACT**

A keyboard entry digital data transmission and reception system employing a one-handed keyboard is disclosed. The novel keyboard arrangement and the logic circuitry associated therewith permits single data characters to be rapidly entered by a plurality of sequential key depressions which uniquely define each character.
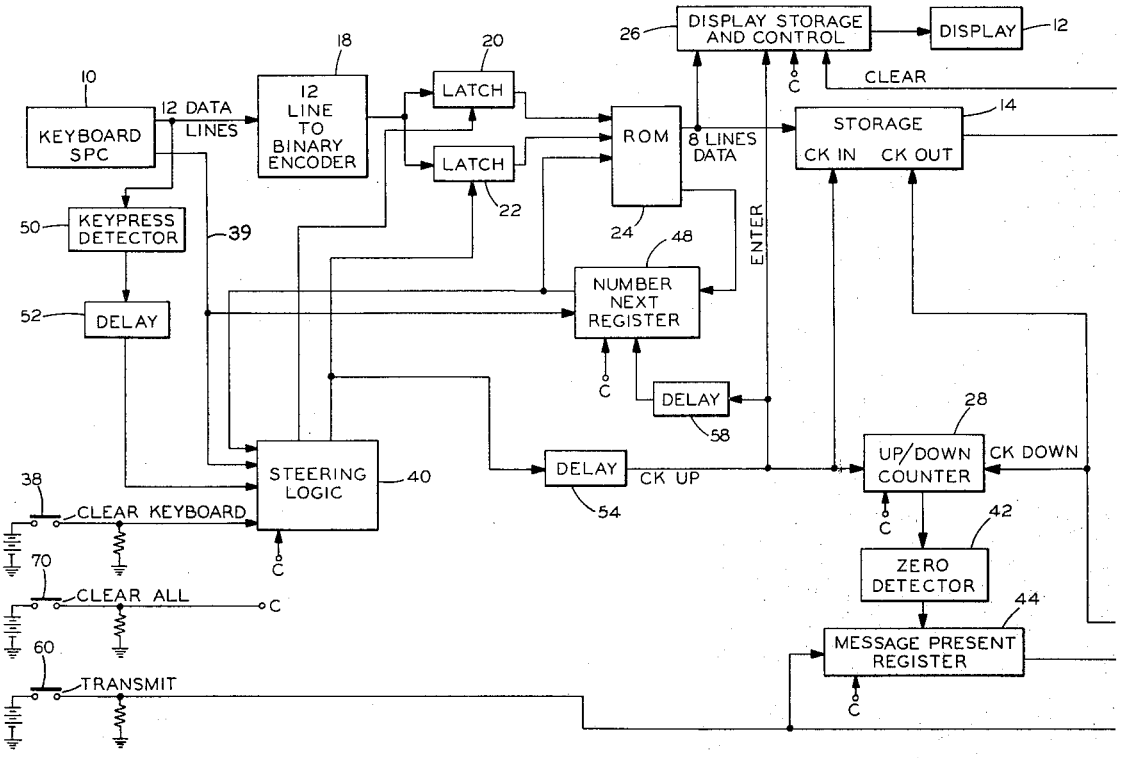
21 Claims, 4 Drawing Figures