US008023065B2

(12) **United States Patent**
Epstein et al.

(10) **Patent No.: US 8,023,065 B2**
(45) **Date of Patent: Sep. 20, 2011**

(54) **OPTICAL ELEMENT FOR LATERAL LIGHT SPREADING IN EDGE-LIT DISPLAYS AND SYSTEM USING SAME**

(75) Inventors: **Kenneth A. Epstein**, St. Paul, MN (US); **Michael F. Weber**, Shoreview, MN (US)

(73) Assignee: **3M Innovative Properties Company**, St. Paul, MN (US)

(*) Notice: Subject to any disclaimer, the term of this patent is extended or adjusted under 35 U.S.C. 154(b) by 626 days.

(21) Appl. No.: **11/167,003**

(22) Filed: **Jun. 24, 2005**

(65) **Prior Publication Data**

US 2006/0290844 A1 Dec. 28, 2006

(51) **Int. Cl.**
G02F 1/1335 (2006.01)

(52) **U.S. Cl.** **349/62**; 349/61; 349/64

(58) **Field of Classification Search** 349/113, 349/114, 61–62, 64
See application file for complete search history.

(56) **References Cited**

U.S. PATENT DOCUMENTS

5,422,756	A		6/1995	Weber
5,587,816	A		12/1996	Gunjima et al.
5,686,979	A		11/1997	Weber et al.
5,712,694	A	*	1/1998	Taira et al. 349/9
5,751,388	A		5/1998	Larson
5,793,456	A		8/1998	Broer et al.
5,825,542	A		10/1998	Cobb, Jr. et al.
5,825,543	A	*	10/1998	Ouderkirk et al. 359/494
5,828,471	A		10/1998	Davis et al.
5,828,488	A		10/1998	Ouderkirk et al.
5,856,855	A		1/1999	Mol et al.
5,867,316	A		2/1999	Carlson et al.
5,882,774	A		3/1999	Jonza et al.
5,940,211	A		8/1999	Hikmet et al.
5,995,690	A		11/1999	Kotz et al.
6,008,871	A		12/1999	Okumura
6,011,602	A		1/2000	Miyashita et al.
6,024,455	A		2/2000	O'Neill et al.
6,099,758	A		8/2000	Verrall et al.

(Continued)

FOREIGN PATENT DOCUMENTS

EP 1 072 637 1/2001

(Continued)

OTHER PUBLICATIONS

"Guideline for the Construction of Thin Light-Boxes using 3M Optical Lighting Film", 3M, St. Paul, Minnesota, Jan. 2000, pp. 1-12.

(Continued)

Primary Examiner — Nathanael R Briggs
(74) *Attorney, Agent, or Firm* — Jay R. Pralle

(57) **ABSTRACT**

An illumination light unit has at least one light source that generates illumination light. The unit also includes a reflecting cavity having one or more reflectors and a controlled transmission mirror disposed at an output of the reflecting cavity. The controlled transmission mirror includes an input coupling element, an output coupling element and a first multilayer reflector disposed between the input and output coupling elements. At least some of the illumination light is reflected within the reflecting cavity by the one or more reflectors and is transmitted out of the reflecting cavity through the controlled transmission mirror. The illumination light unit may be used for generating light for space lighting, or for illuminating a display. For example, the unit may be used in a backlight to illuminate a lightguide placed behind a display panel.
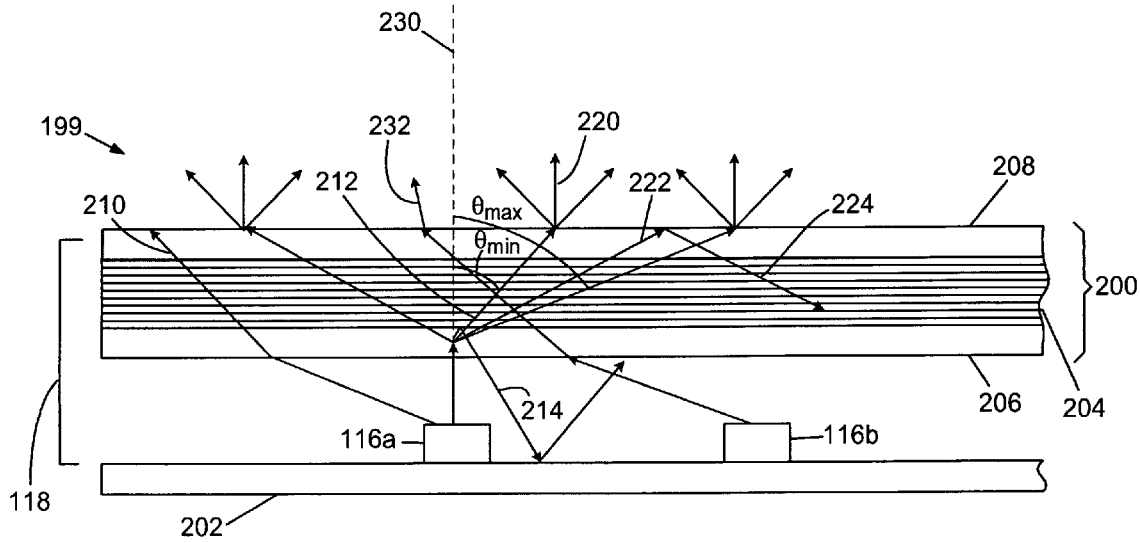
19 Claims, 11 Drawing Sheets