Dec. 22, 1959 J. H. PAULICK, JR 2,918,165

CUTTER GUARD

Filed Dec. 31, 1956

FIG. 2

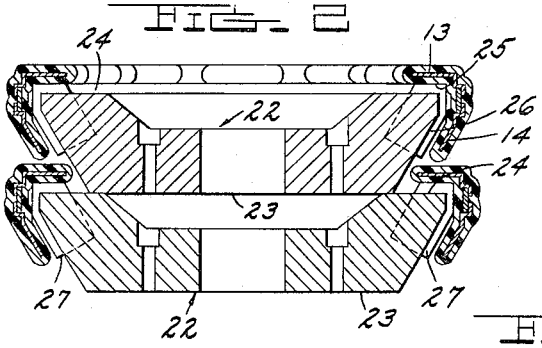

FIG. 1

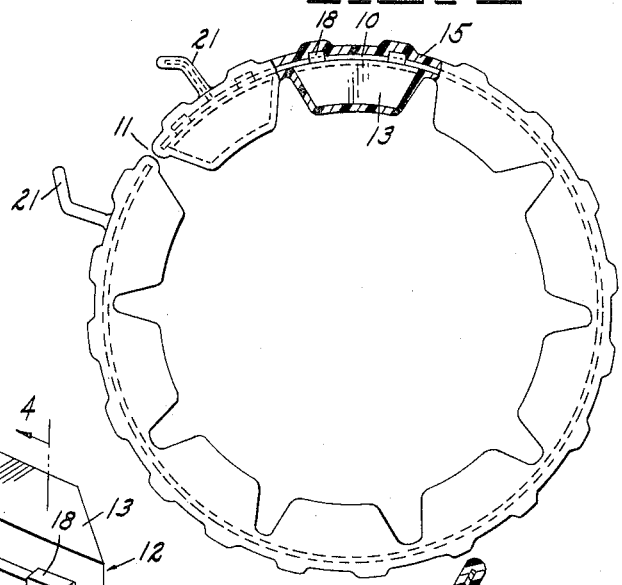

FIG. 3

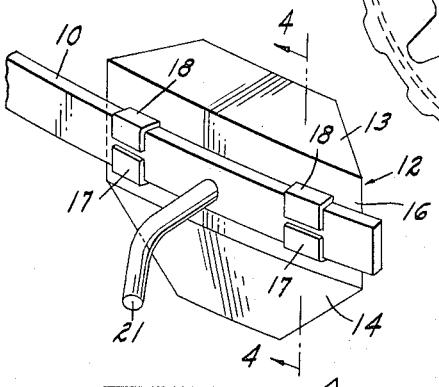

FIG. 4

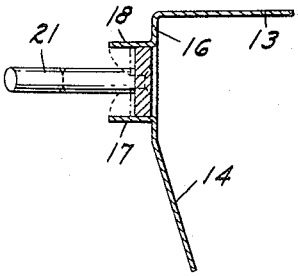

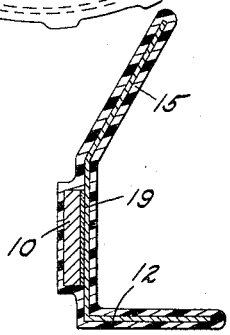

FIG. 5

INVENTOR.
JOSEPH H. PAULICK JR.
BY William T. Sewald
ATTORNEY