US009411365B1

(12) **United States Patent**
Tanner et al.

(10) **Patent No.: US 9,411,365 B1**
(45) **Date of Patent: Aug. 9, 2016**

(54) **360 DEGREE DUAL PIVOT VARIABLE TORQUE HINGE MECHANISM**

(71) Applicant: **GOOGLE INC.**, Mountain View, CA (US)

(72) Inventors: **James Tanner**, Los Gatos, CA (US); **Lawrence James Kerila**, San Jose, CA (US); **Prashant Patel**, Cupertino, CA (US); **Lawrence Lam**, San Jose, CA (US)

(73) Assignee: **Google Inc.**, Mountain View, CA (US)

(*) Notice: Subject to any disclaimer, the term of this patent is extended or adjusted under 35 U.S.C. 154(b) by 70 days.

(21) Appl. No.: **14/539,125**

(22) Filed: **Nov. 12, 2014**

Related U.S. Application Data

(60) Provisional application No. 61/970,618, filed on Mar. 26, 2014.

(51) **Int. Cl.**
H05K 5/00 (2006.01)
G06F 1/16 (2006.01)

(52) **U.S. Cl.**
CPC ***G06F 1/1618*** (2013.01); ***G06F 1/1643*** (2013.01); ***G06F 1/1681*** (2013.01); ***G06F 1/1683*** (2013.01)

(58) **Field of Classification Search**
CPC ... G06F 1/1681; G06F 1/1618; G06F 1/1641; Y10T 16/547; Y10T 16/5387; Y10T 16/2771; Y10T 16/52; Y10T 16/53824; Y10T 16/53832; H05K 5/0226
See application file for complete search history.

(56) **References Cited**

U.S. PATENT DOCUMENTS

5,751,544 A 5/1998 Song
6,493,216 B1 12/2002 Lin
7,155,266 B2 12/2006 Stefansen
7,345,872 B2 3/2008 Wang
7,832,056 B2 * 11/2010 Kuwajima H04M 1/022 16/282
8,208,245 B2 6/2012 Staats et al.
8,395,722 B2 3/2013 Mathew et al.
8,474,101 B2 * 7/2013 Wang G06F 1/1681 16/354
8,627,546 B2 * 1/2014 Zhang G06F 1/1681 16/366
8,776,319 B1 * 7/2014 Chang G06F 1/1681 16/303
9,134,767 B2 * 9/2015 Chen G06F 1/1681
2004/0155861 A1 8/2004 Jackson, III

(Continued)

FOREIGN PATENT DOCUMENTS

EP 1698156 B1 5/2011

OTHER PUBLICATIONS

"Aspire S7", retrieved on Dec. 2, 2013 from us.acer.com/ac/en/US/content/series/aspires7, 2 pages.

(Continued)

Primary Examiner — Robert J Hoffberg
Assistant Examiner — Hung Dang
(74) *Attorney, Agent, or Firm* — Brake Hughes Bellermann LLP

(57) **ABSTRACT**

In one general aspect, a method of coupling a base to a lid of a computing device using a hinge can include coupling a base hinge flange to the base, the base hinge flange being connected to a base hinge part that includes a knuckle including a toggle pivot, the toggle pivot coupled to and surrounding a first portion of a first shaft, and coupling a lid hinge flange to the lid, the lid hinge flange being connected to a main hinge part that includes a first cam, the lid hinge flange including a first lid main band and a second lid main band surrounding a first portion of a second shaft, the second shaft being parallel to the first shaft.
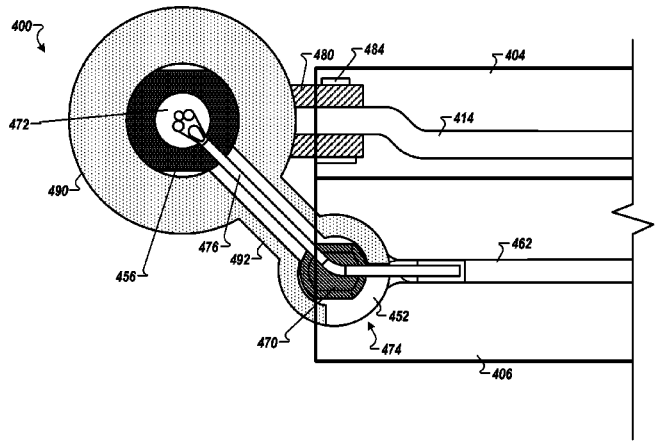
19 Claims, 13 Drawing Sheets