US009510665B2

(12) **United States Patent**
Lombardi

(10) **Patent No.: US 9,510,665 B2**
(45) **Date of Patent: *Dec. 6, 2016**

(54) **TOOTHBRUSH**

(71) Applicant: **Stephen Lombardi**, Bronx, NY (US)

(72) Inventor: **Stephen Lombardi**, Bronx, NY (US)

(*) Notice: Subject to any disclaimer, the term of this patent is extended or adjusted under 35 U.S.C. 154(b) by 362 days.

This patent is subject to a terminal disclaimer.

(21) Appl. No.: **14/182,861**

(22) Filed: **Feb. 18, 2014**

(65) **Prior Publication Data**

US 2014/0157537 A1 Jun. 12, 2014

Related U.S. Application Data

(63) Continuation of application No. 12/927,652, filed on Nov. 20, 2010, now Pat. No. 8,650,697.

(51) **Int. Cl.**

A46B 9/04	(2006.01)
A46B 5/00	(2006.01)
A46B 17/06	(2006.01)

(52) **U.S. Cl.**

CPC ***A46B 9/04*** (2013.01); ***A46B 5/0041*** (2013.01); ***A46B 17/065*** (2013.01); *A46B 2200/1066* (2013.01)

(58) **Field of Classification Search**

CPC A46B 9/04; A46B 5/0041; A46B 17/065; A46B 2200/1066; A46B 5/02

See application file for complete search history.

(56) **References Cited**

U.S. PATENT DOCUMENTS

1,956,477	A	4/1934	Segal	
2,247,003	A	9/1940	Smith et al.	
5,228,166	A *	7/1993	Gomez	A46B 5/02 15/167.1
5,956,796	A *	9/1999	Lodato	A46B 5/00 15/143.1
8,650,697	B2 *	2/2014	Lombardi	A46B 5/0041 15/143.1
2005/0274906	A1	12/2005	Riddell	
2008/0060153	A1 *	3/2008	Jansheski	A46B 17/06 15/105
2009/0083924	A1	4/2009	Shepherd et al.	
2010/0325828	A1 *	12/2010	Braun	A46B 15/0012 15/167.1
2011/0162155	A1 *	7/2011	Wai	A46B 15/0002 15/4

FOREIGN PATENT DOCUMENTS

CN	2699728 Y	5/2005

* cited by examiner

Primary Examiner — Robert Scruggs

(74) *Attorney, Agent, or Firm* — Abelman, Frayne & Schwab

(57) **ABSTRACT**

A toothbrush having a substantially vertical orientation while at rest on a supporting surface, including a body having one end provided with a tooth-brushing element and another opposite end, said body having at least a part configured so that when the toothbrush is inclined, even close to a horizontal position, the toothbrush automatically self erects to the substantially vertical orientation to prevent a contact of said tooth-brushing element with the supporting surface.
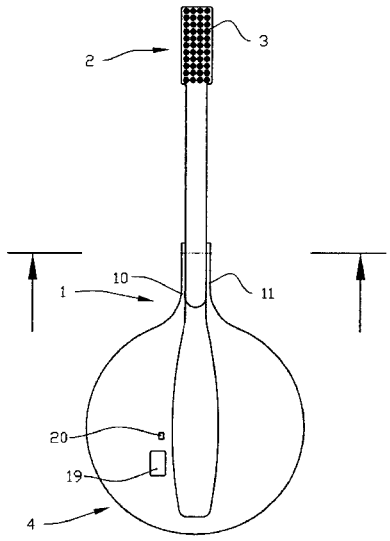
20 Claims, 2 Drawing Sheets