US009409765B1

(12) **United States Patent**
Desai et al.

(10) **Patent No.: US 9,409,765 B1**
(45) **Date of Patent: Aug. 9, 2016**

(54) **METHOD AND APPARATUS FOR AN ISOLATING STRUCTURE**

(71) Applicant: **Maxim Integrated Products, Inc.**, San Jose, CA (US)

(72) Inventors: **Hemant Desai**, Gilbert, AZ (US); **Viresh P. Patel**, Austin, TX (US)

(73) Assignee: **Maxim Integrated Products, Inc.**, San Jose, CA (US)

(*) Notice: Subject to any disclaimer, the term of this patent is extended or adjusted under 35 U.S.C. 154(b) by 162 days.

(21) Appl. No.: **13/757,307**

(22) Filed: **Feb. 1, 2013**

(51) **Int. Cl.**
H01L 29/84 (2006.01)
H01L 21/52 (2006.01)
B81B 7/00 (2006.01)

(52) **U.S. Cl.**
CPC ***B81B 7/0058*** (2013.01)

(58) **Field of Classification Search**
CPC H01L 21/50; H01L 29/84; H01L 41/053; H01L 21/52
See application file for complete search history.

(56) **References Cited**

U.S. PATENT DOCUMENTS

2007/0013052	A1*	1/2007	Zhe et al.	257/704
2007/0040231	A1*	2/2007	Harney et al.	257/415
2008/0290430	A1*	11/2008	Mahadevan et al.	257/418
2010/0192689	A1*	8/2010	Ulm	B81B 7/0012 73/430
2012/0126347	A1*	5/2012	Yang et al.	257/416
2012/0237073	A1*	9/2012	Goida et al.	381/361
2012/0319256	A1*	12/2012	Lo et al.	257/666
2013/0140655	A1*	6/2013	Yeh et al.	257/416
2013/0241045	A1*	9/2013	Goida et al.	257/704
2015/0023523	A1*	1/2015	Elian et al.	381/91

* cited by examiner

Primary Examiner — Tan N Tran
Assistant Examiner — Fazli Erdem
(74) *Attorney, Agent, or Firm* — North Weber & Baugh LLP

(57) **ABSTRACT**

The present invention relates to a method and apparatus for an isolating structure. Embodiments of the present invention provide a robust packaging process and a mechanical filter to reduce the mechanical shock from impact. The mechanical filter can be integrated within the package substrate as part of the packaging process, reducing the assembly complexity.
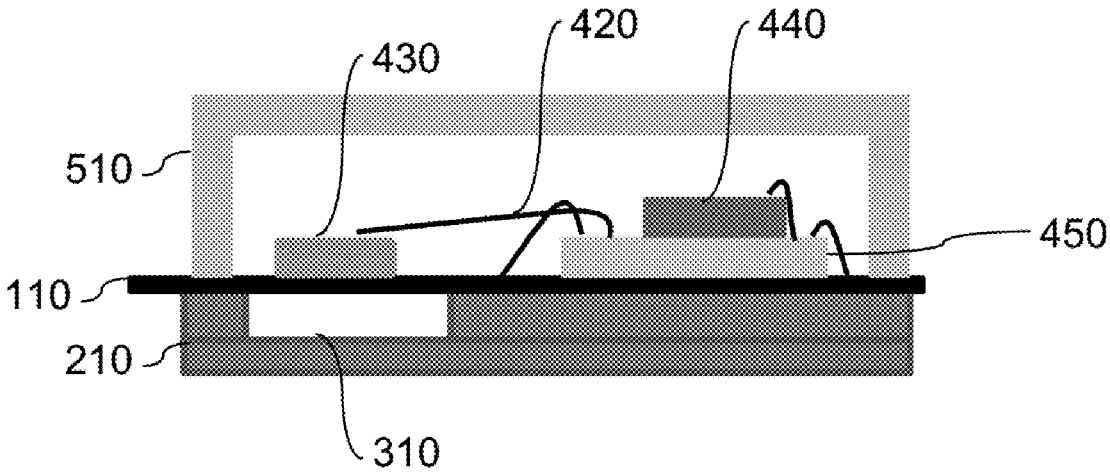
17 Claims, 8 Drawing Sheets