350-423 SR CROSS REFERENCE SEARCH ROOM
XR 3,507,565
TX 4065R

April --, ---- 3,507,565

VARIABLE-POWER LENS AND SYSTEM

Filed Feb. 21, 1967 3 Sheets-Sheet 1

FIG. 1

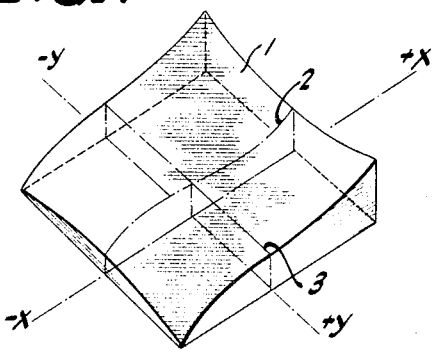

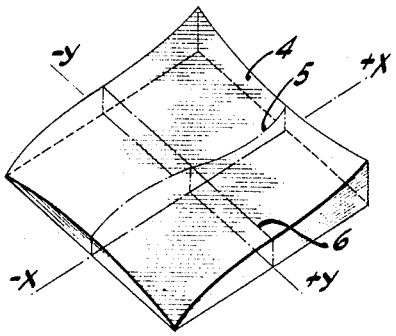

FIG. 2

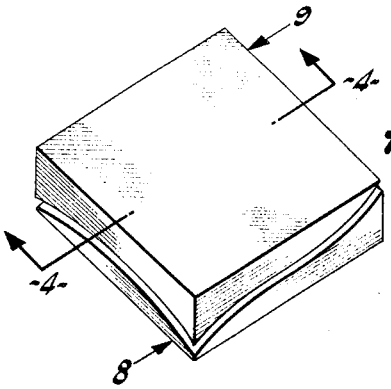

FIG. 3

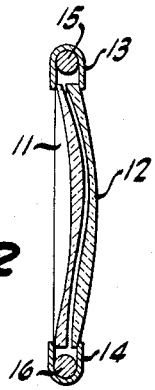

FIG. 12

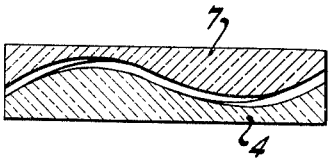

FIG. 4

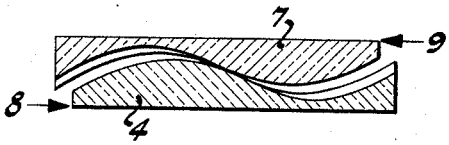

FIG. 5

INVENTORS
LUIS W. ALVAREZ
WILLIAM E. HUMPHREY
BY Lippincott, Ralk & Hendrickson
ATTORNEYS

3507565
OR IN 351/17