PAINT APPLICATION WITH GUIDE MEANS

Filed Dec. 11, 1968 2 Sheets-Sheet 1

Fig. 1.

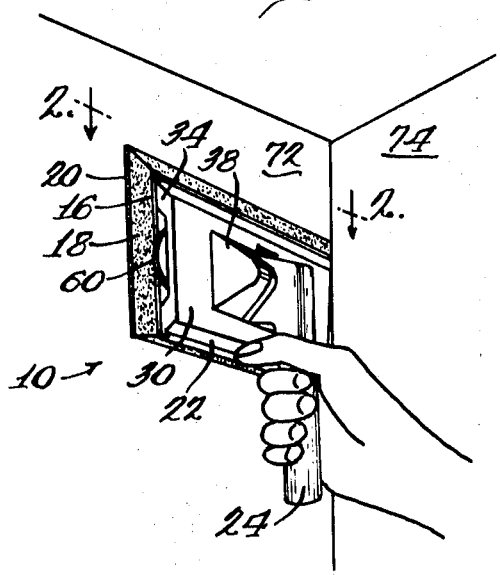

Fig. 3.

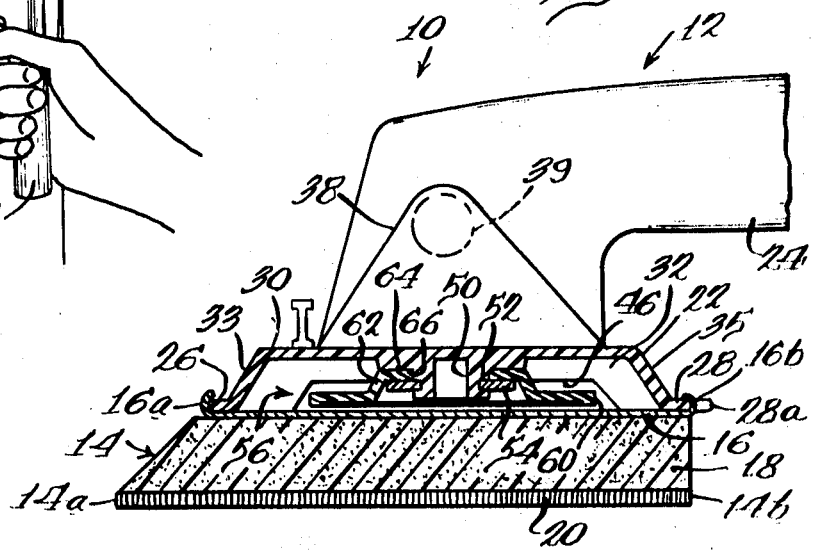

Fig. 2.

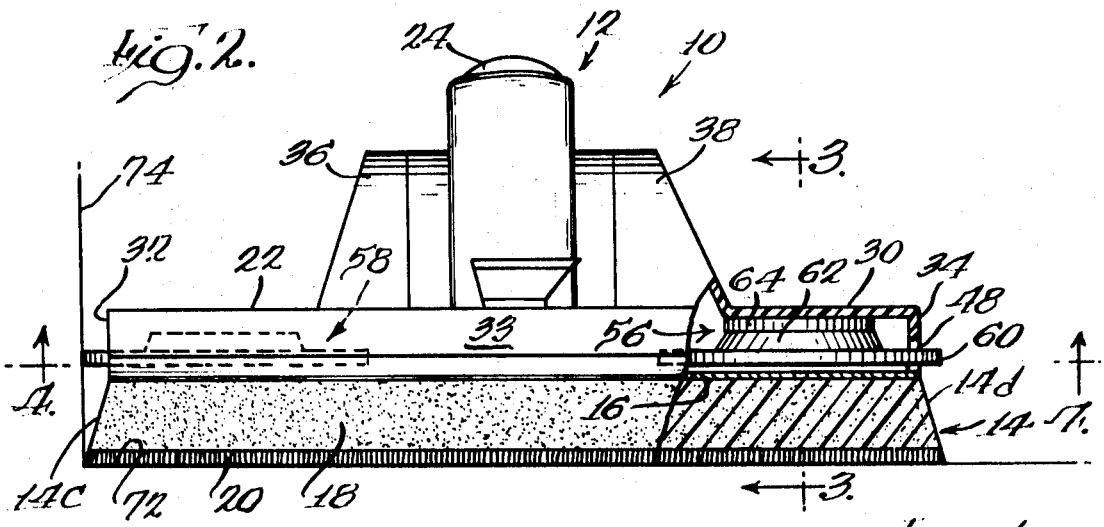

Inventor:
Frederick B. Burns
By Hofgren, Wegner,
Allen, Stellman & McCord
Attys