FILTER WITH ROTATING BACKWASH SELECTOR

Filed Dec. 14, 1970

Fig. 1

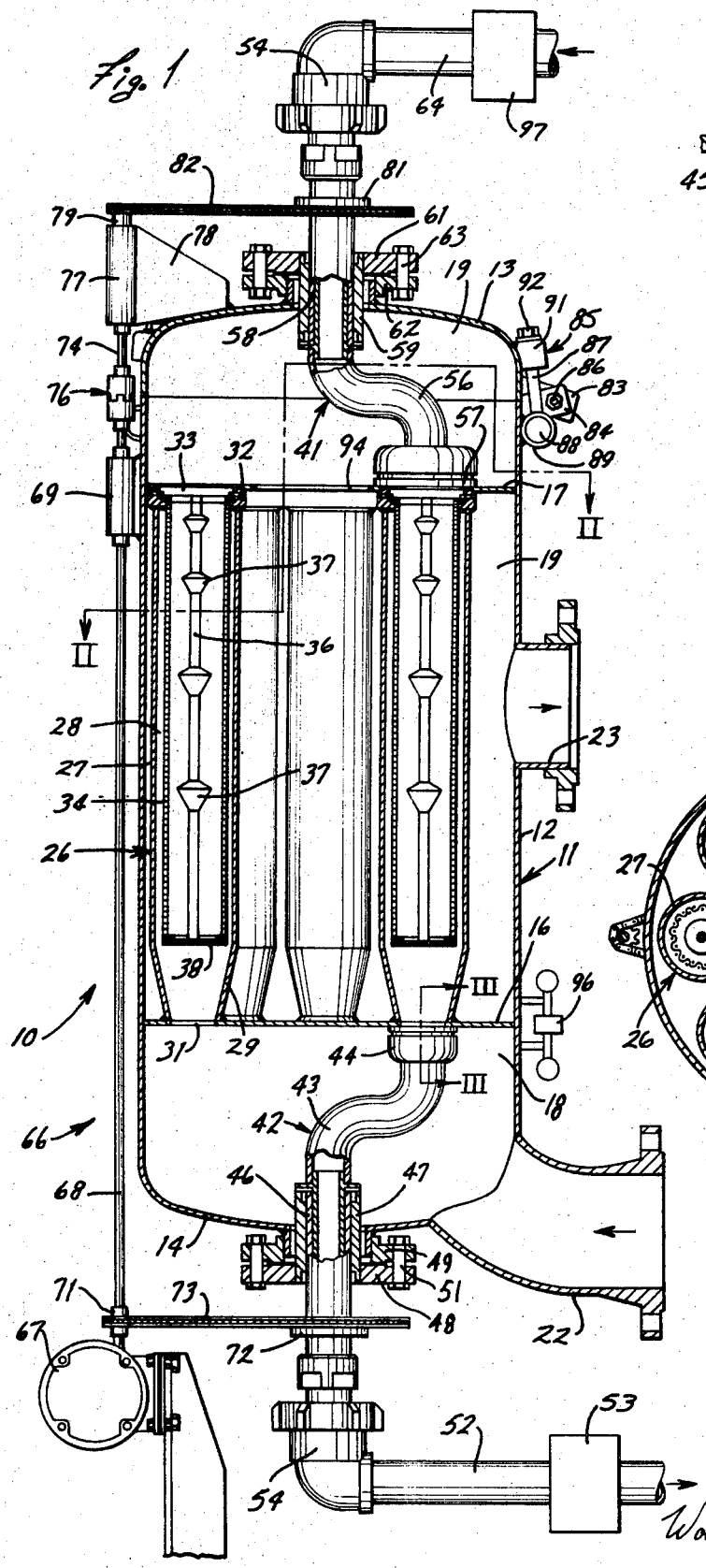

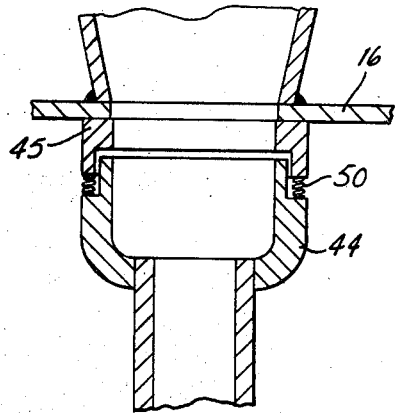

Fig. 3

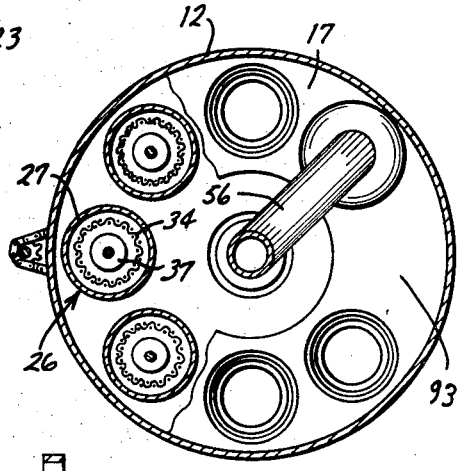

Fig. 2

INVENTORS
THOMAS L. REECE
THURMAN E. BRYANT
BY Woodhams, Blanchard & Flynn
ATTORNEYS