US008100965B2

(12) **United States Patent**
Cumming et al.

(10) **Patent No.: US 8,100,965 B2**
(45) **Date of Patent: *Jan. 24, 2012**

(54) **FLOATING OPTIC ACCOMMODATING INTRAOCULAR LENS**

(75) Inventors: **J. Stuart Cumming**, Laguna Beach, CA (US); **Steven J. Dell**, Austin, TX (US); **Jonathan R. Soiseth**, Pomona, CA (US)

(73) Assignee: **C&C Vision International Limited**, Dublin (IE)

(*) Notice: Subject to any disclaimer, the term of this patent is extended or adjusted under 35 U.S.C. 154(b) by 0 days.

This patent is subject to a terminal disclaimer.

(21) Appl. No.: **12/762,975**

(22) Filed: **Apr. 19, 2010**

(65) **Prior Publication Data**

US 2010/0204789 A1 Aug. 12, 2010

Related U.S. Application Data

(63) Continuation of application No. 11/360,019, filed on Feb. 21, 2006, now Pat. No. 7,837,730.

(51) **Int. Cl.**
A61F 2/16 (2006.01)

(52) **U.S. Cl.** **623/6.37**; 623/6.38; 623/6.4; 623/6.44; 623/6.46

(58) **Field of Classification Search** 623/6.37–6.4, 623/6.41, 6.43, 6.44, 6.46, 6.47
See application file for complete search history.

(56) **References Cited**

U.S. PATENT DOCUMENTS

4,118,808	A	10/1978	Poler
4,122,556	A	10/1978	Poler
4,168,547	A	9/1979	Konstantinov et al.
4,174,543	A	11/1979	Kelman
4,244,060	A	1/1981	Hoffer
4,254,509	A	3/1981	Tennant
4,254,510	A	3/1981	Tennant
4,298,995	A	11/1981	Poler
4,298,996	A	11/1981	Barnet
4,304,012	A	12/1981	Richard
4,409,691	A	10/1983	Levy
4,424,597	A	1/1984	Schlegel
4,441,217	A	4/1984	Cozean, Jr.
4,477,931	A	10/1984	Kelman
4,573,998	A	3/1986	Mazzocco
4,585,457	A	4/1986	Kalb

(Continued)

FOREIGN PATENT DOCUMENTS

EP 0208546 A 1/1987

(Continued)

OTHER PUBLICATIONS

Archimede Busacca, Ciliary Muscle Physiology Studied by Gonioscopy, Annals of Oculistics, vol. CLXXXVIII, Jan. 1955 (English Translation).

(Continued)

Primary Examiner — David H Willse
Assistant Examiner — Javier Blanco
(74) *Attorney, Agent, or Firm* — Orrick, Herrington & Sutcliffe, LLP

(57) **ABSTRACT**

An accommodating intraocular lens comprising a flexible body, a flexible optic which is moveable anteriorly and posteriorly relative to the lens body, and a weakened portion connecting the optic to the body. The body may have extending centration and fixation loops on its distal ends.
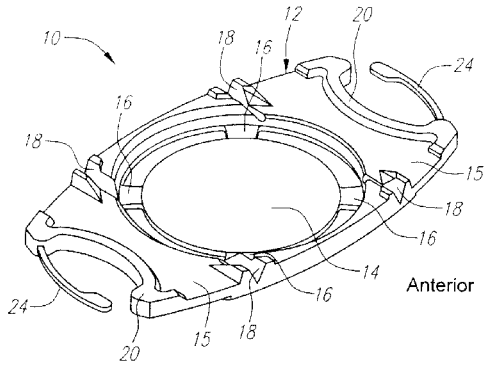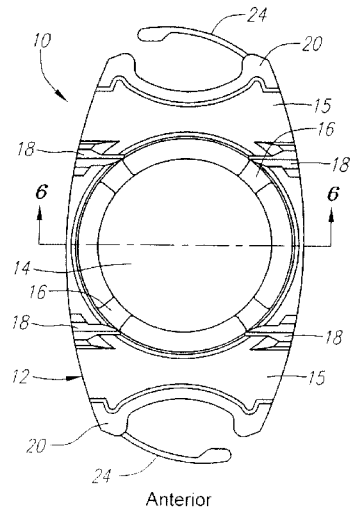
2 Claims, 2 Drawing Sheets