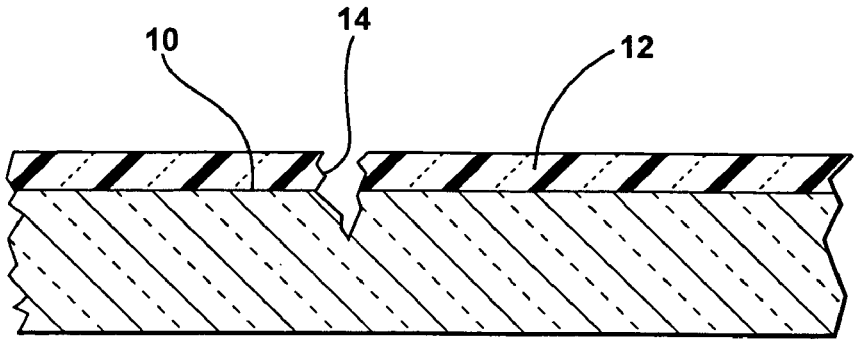

FIG - 1

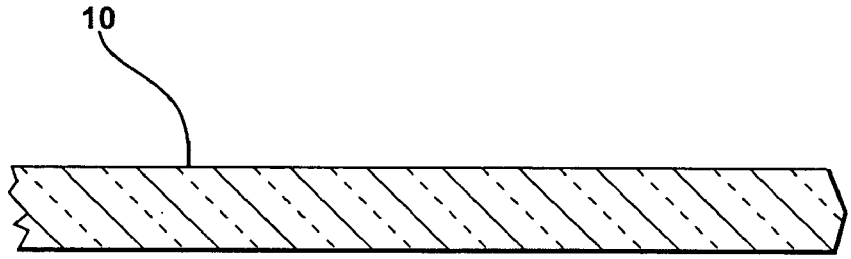

FIG - 2

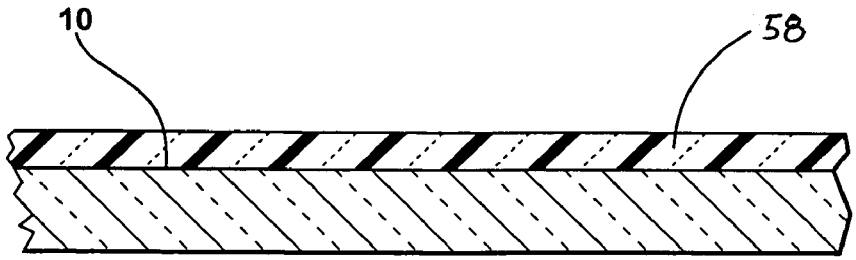

FIG - 3