F. EVANS AND J. CORCOS.

FILLING APPARATUS FOR LIQUID FUEL TANKS AND THE LIKE.

APPLICATION FILED MAR. 29, 1919.

1,381,864.

Patented June 14, 1921.

2 SHEETS—SHEET 2.

Fig. 4

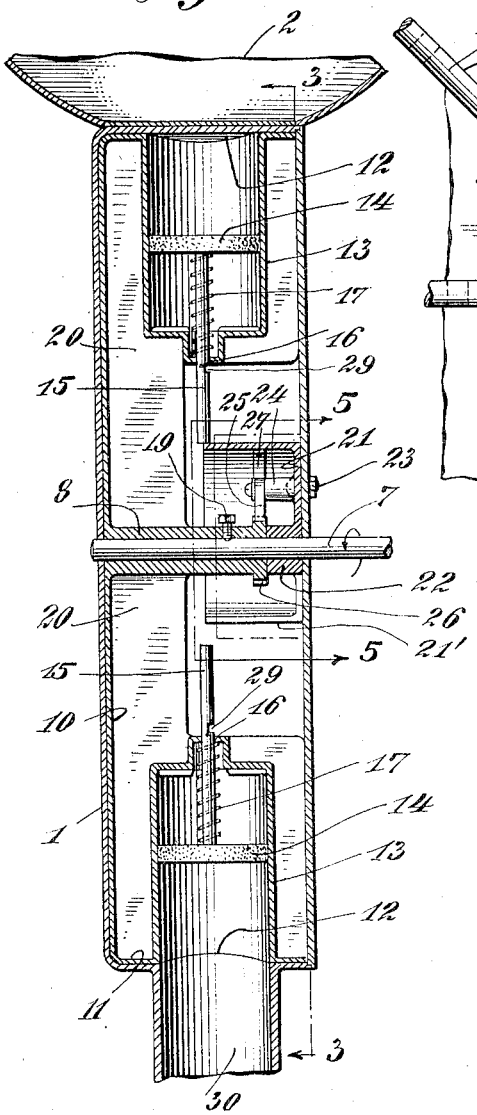

Fig. 5.

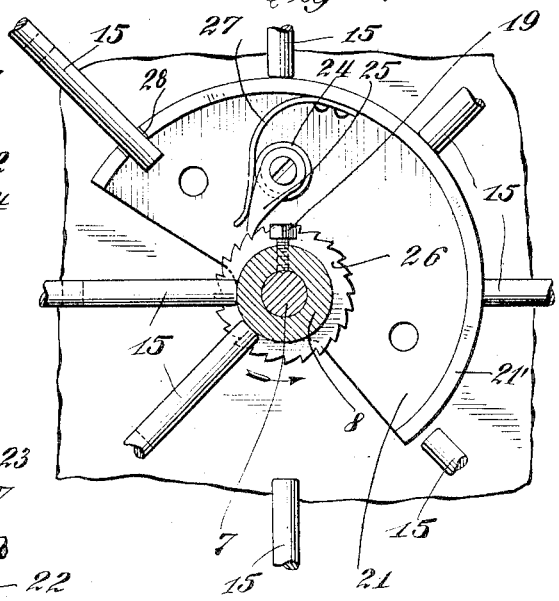

Fig. 6.

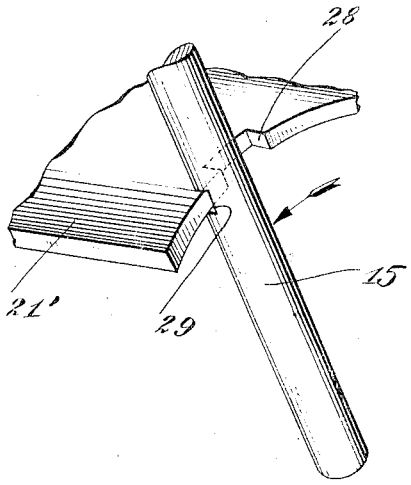

Inventors
Fred Evans
and Joseph Corcos
By their Attorney
Charles H. Wilson