April 7, 1959 M. H. PELAVIN 2,880,764

DROP VOLUME MEASURING APPARATUS

Filed May 23, 1957

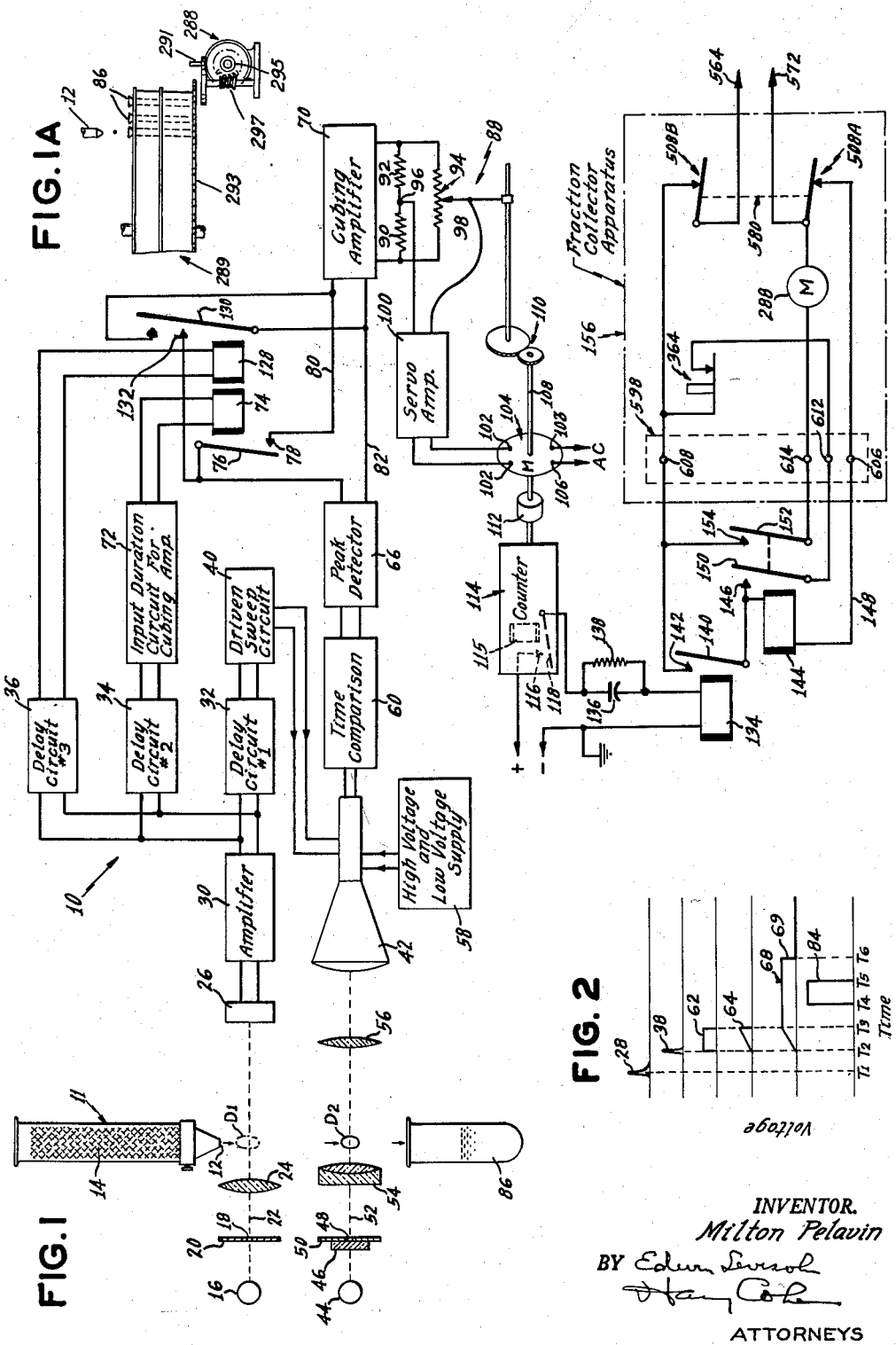

INVENTOR.
Milton Pelavin
BY Edwin Sevrsol
Harry Cohen
ATTORNEYS