United States Patent [19]

Fogle

[11] **3,878,964**

[45] **Apr. 22, 1975**

[54] **CASE AND HANDLE**

[75] Inventor: **Marlin E. Fogle,** West Orange, N.J.

[73] Assignee: **Q-V.S. Inc.,** East Orange, N.J.

[22] Filed: **Nov. 28, 1973**

[21] Appl. No.: **419,683**

[52] **U.S. Cl.** ..... **220/96;** 224/46 R

[51] **Int. Cl.** **B65d 25/28**

[58] **Field of Search** ..... 248/12, 13, 471, 114, 116, 248/126; 240/10.6 F, 8.18, 52.3, 52.5, 57.1, 81, 81 C, 18 BC; 206/305; 220/94, 96, 55.7, 55.4; 16/115, 110; 224/46, 45 R

[56] **References Cited**

UNITED STATES PATENTS

627,273	6/1899	Serbert	220/96
928,101	7/1909	Brakeman	220/96
1,698,915	1/1929	Kircher	220/96
3,124,266	3/1964	Morgan	220/55.7

FOREIGN PATENTS OR APPLICATIONS

55,995	2/1944	Netherlands	220/96
327,951	3/1958	Switzerland	220/96
291,564	6/1928	United Kingdom	240/52.3

Primary Examiner—Robert J. Spar
Assistant Examiner—Kenneth Noland
Attorney, Agent, or Firm—Rudolph J. Jurick

[57] **ABSTRACT**

A handle mounted for pivotal and slidable movement on an instrument case, said handle being positionable in any one of three predetermined positions.
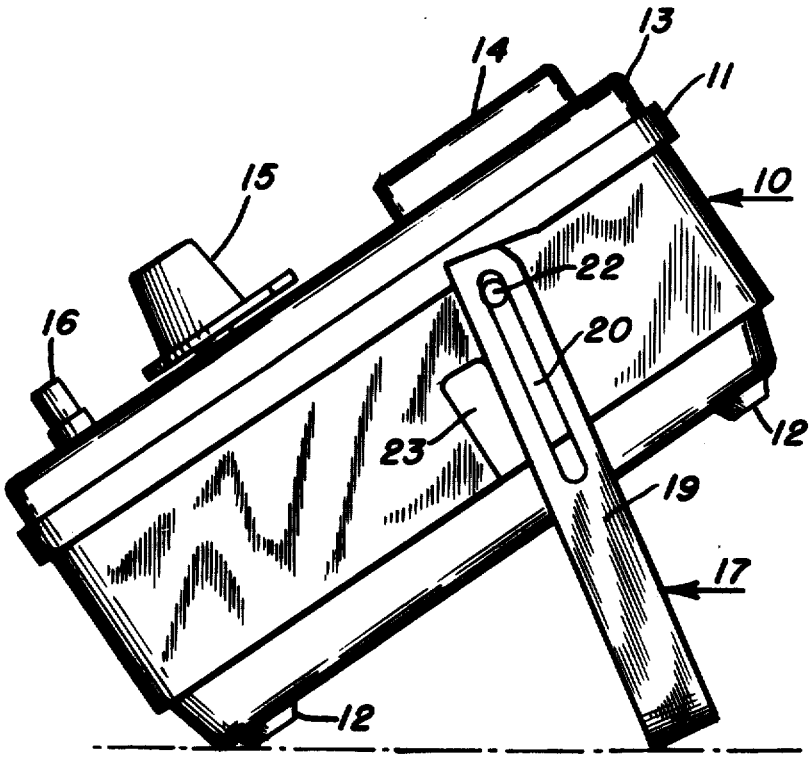
1 Claim, 4 Drawing Figures