US005767464A

United States Patent [19]

Dyer et al.

[11] Patent Number: 5,767,464

[45] Date of Patent: Jun. 16, 1998

[54] **ELECTRONIC DEVICE LOW PROFILE KEYBOARD SWITCH ASSEMBLY WITH DEPLOYED AND STORED ACTUATING MECHANISM**

[75] Inventors: **Terill D. Dyer**, Dallas; **Satwinder D. S. Malhi**, Garland, both of Tex.

[73] Assignee: **Texas Instruments Incorporated**, Dallas, Tex.

[21] Appl. No.: **761,622**

[22] Filed: **Dec. 5, 1996**

[51] **Int. Cl.**[6] **H01H 9/00**; H05K 5/00; B41J 5/00; G06C 7/00

[52] **U.S. Cl.** ..... **202/5 A**; 200/344; 361/380; 345/168

[58] **Field of Search** ..... 200/5 A, 341, 200/344, 345; 361/680; 345/168

[56] **References Cited**

U.S. PATENT DOCUMENTS

4,580,022	4/1986	Oelsch et al.	200/340
4,902,862	2/1990	Oelsch et al.	200/344
5,382,762	1/1995	Mochizuki	200/5 A
5,399,822	3/1995	Sato et al.	200/344
5,463,195	10/1995	Watanabe et al.	200/5 A
5,519,569	5/1996	Sellers	360/380
5,532,904	7/1996	Sellers	200/344 X
5,587,875	12/1996	Sellers	200/344 X
5,590,020	12/1996	Sellers	361/380
5,594,618	1/1997	Sellers	200/6 A X
5,602,715	2/1997	Lempicki et al.	200/5 A X
5,625,532	4/1997	Sellers	200/344 X
5,654,872	8/1997	Sellers	200/344 X

Primary Examiner—J. R. Scott

Attorney, Agent, or Firm—Bret J. Petersen; James C. Kesterson; Richard L. Donaldson

[57] **ABSTRACT**

A low profile keyboard which can be deployed from a storage position and once deployed have the feel and travel of prior art keyboards using scissor type wobble control. An embodiment of the invention reduces the storage thickness in prior art designs by translating the flexible dome to a position under the keycap when in the stowed position and back to beneath the actuator mechanism when in the deployed position. Thus in the deployed position the space for the key travel and the dome does not contribute to the overall thickness of the keyboard.
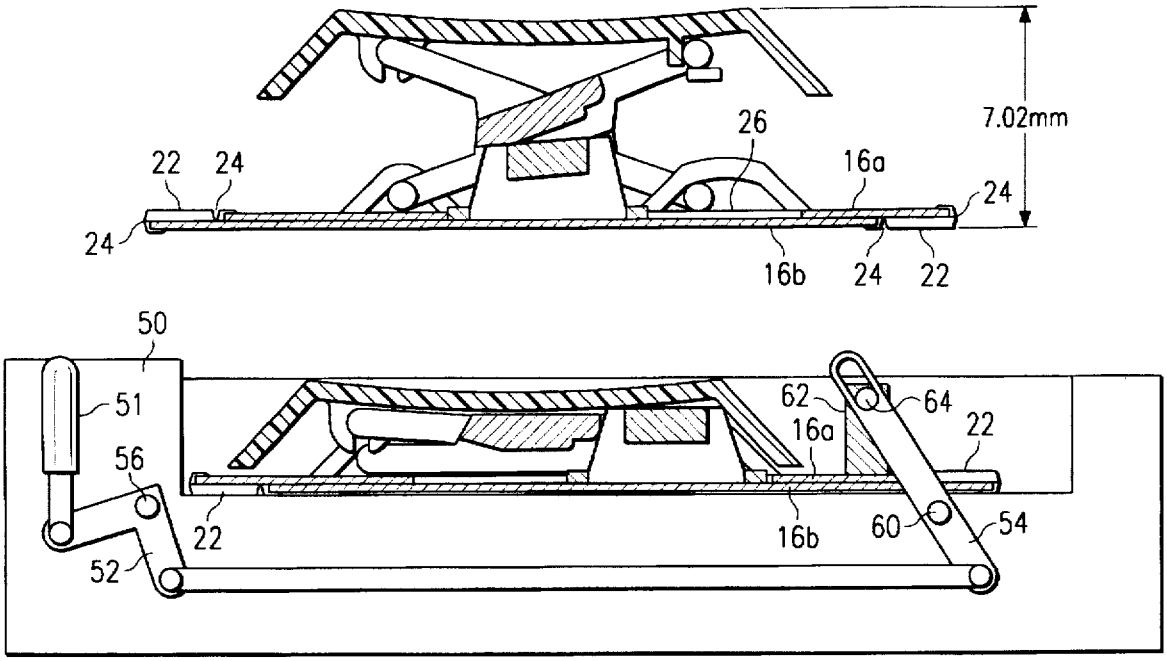
10 Claims, 6 Drawing Sheets