US007954064B2

(12) **United States Patent**
Forstall et al.

(10) **Patent No.: US 7,954,064 B2**
(45) **Date of Patent: May 31, 2011**

(54) **MULTIPLE DASHBOARDS**

(75) Inventors: **Scott Forstall**, Mountain View, CA (US); **Imran A. Chaudhri**, San Francisco, CA (US); **John O. Louch**, San Luis Obispo, CA (US); **Eric Steven Peyton**, Lisle, IL (US)

(73) Assignee: **Apple Inc.**, Cupertino, CA (US)

(*) Notice: Subject to any disclaimer, the term of this patent is extended or adjusted under 35 U.S.C. 154(b) by 205 days.

(21) Appl. No.: **11/346,603**

(22) Filed: **Feb. 1, 2006**

(65) **Prior Publication Data**

US 2007/0101297 A1 May 3, 2007

Related U.S. Application Data

(60) Provisional application No. 60/737,942, filed on Nov. 18, 2005.

(51) **Int. Cl.**
G06F 3/048 (2006.01)

(52) **U.S. Cl.** **715/779**; 715/765; 715/778

(58) **Field of Classification Search** 715/779
See application file for complete search history.

(56) **References Cited**

U.S. PATENT DOCUMENTS

4,752,893	A		6/1988	Guttag et al.
5,168,441	A		12/1992	Ornaheim et al.
5,289,574	A		2/1994	Sawyer
5,297,250	A		3/1994	Leroy et al.
5,351,995	A		10/1994	Booker
5,357,603	A		10/1994	Parker
5,379,057	A		1/1995	Clough et al.
5,388,201	A		2/1995	Hourvitz et al.
5,416,890	A		5/1995	Beretta
5,481,665	A		1/1996	Okada et al.
5,490,246	A		2/1996	Brotsky et al.
5,522,022	A		5/1996	Rao et al.
5,537,630	A		7/1996	Berry et al.
5,564,002	A	*	10/1996	Brown 715/778
5,564,022	A		10/1996	Debnath et al.
5,588,098	A		12/1996	Chen et al.
5,602,997	A		2/1997	Carpenter et al.
5,638,501	A		6/1997	Gough et al.
5,644,737	A		7/1997	Tuniman et al.
5,644,739	A		7/1997	Moursund
5,651,107	A		7/1997	Frank et al.

(Continued)

FOREIGN PATENT DOCUMENTS

DE 102 42 378 3/2004

(Continued)

OTHER PUBLICATIONS

VMWare, "VMWare Workstation User's Manual," 2002, pp. 12-13.*

(Continued)

Primary Examiner — William L Bashore
Assistant Examiner — Daniel Um
(74) *Attorney, Agent, or Firm* — Fish & Richardson P.C.

(57) **ABSTRACT**

Systems, methods, computer-readable mediums, user interfaces and other implementations are disclosed for organizing, managing and presenting widgets in display areas associated with multiple dashboard environments. In some implementations, a first display area associated with a first dashboard environment is configured for displaying at least one widget from a first set of widgets. A second display area associated with a second dashboard environment is configured for displaying at least one widget from a second set of widgets.
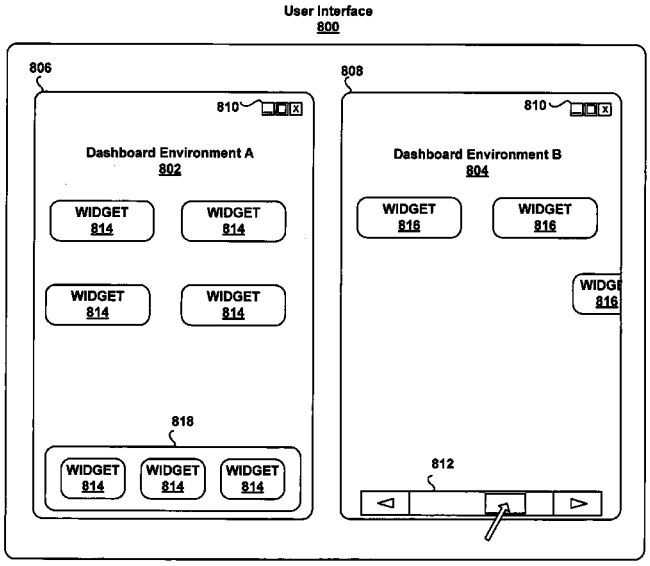
18 Claims, 24 Drawing Sheets