Nov. 14, 1967 C. J. DE COSTE 3,352,364

JACKET TYPE SPRINKLING AND SPRAYING DEVICE

Filed Sept. 17, 1965 2 Sheets-Sheet 1

Fig. 2

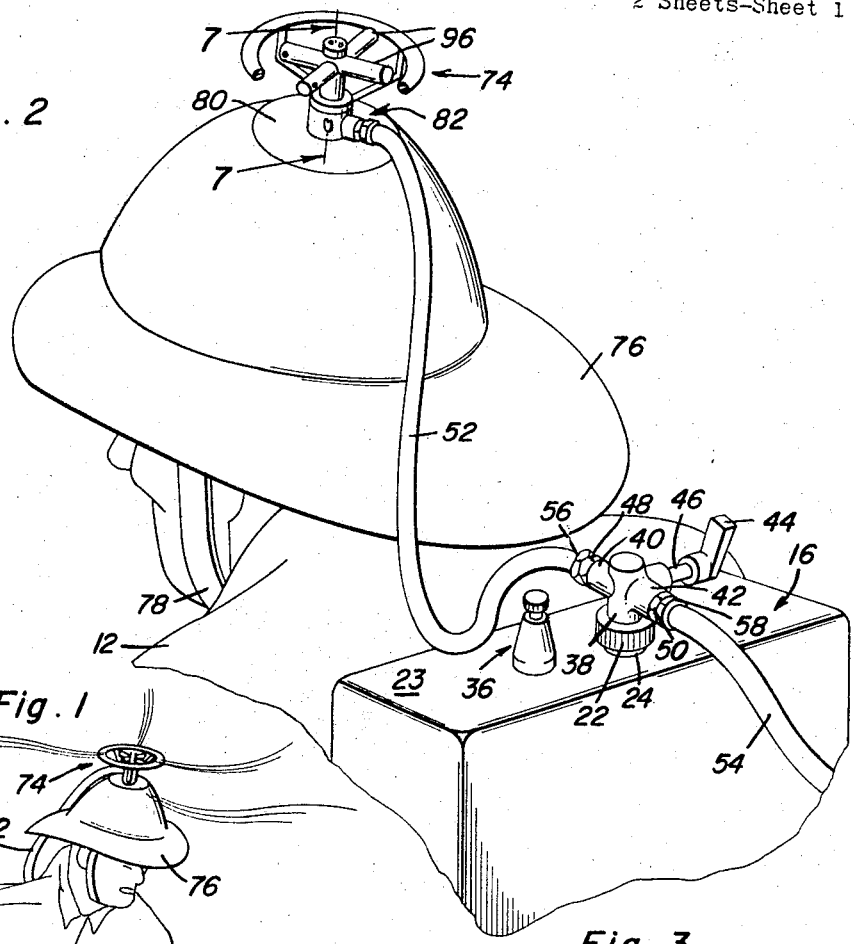

Fig. 1

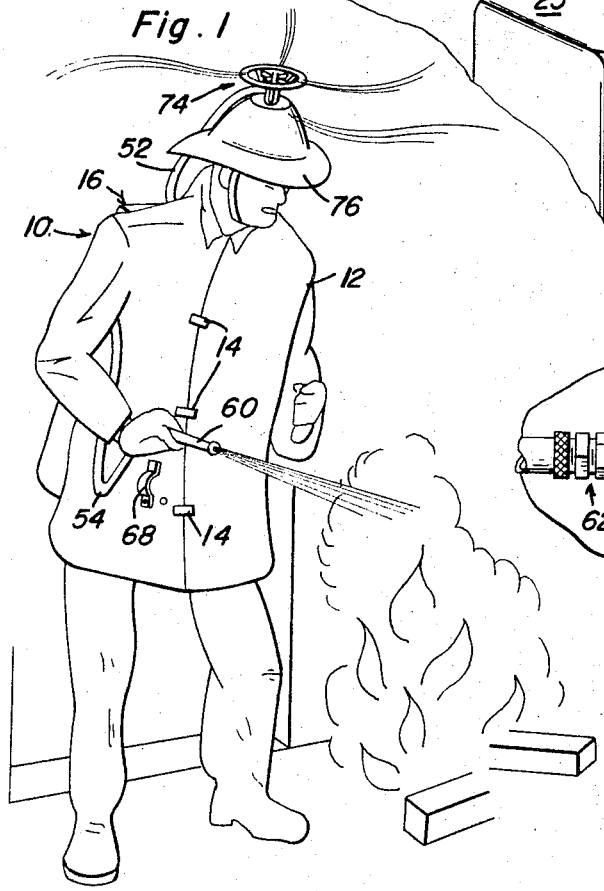

Fig. 3

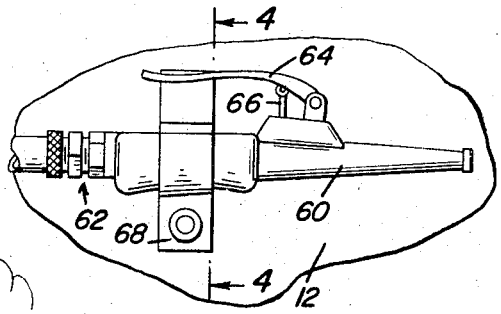

Clarence J. DeCoste
INVENTOR.

BY Clarence A. O'Brien and Harvey B. Jacobson
Attorneys