Nov. 7, 1967 A. E. COHN 3,351,064

COMBINED NOTEBOOK AND FLEXIBLE BAG CLOSURE

Filed Jan. 18, 1966 3 Sheets-Sheet 1

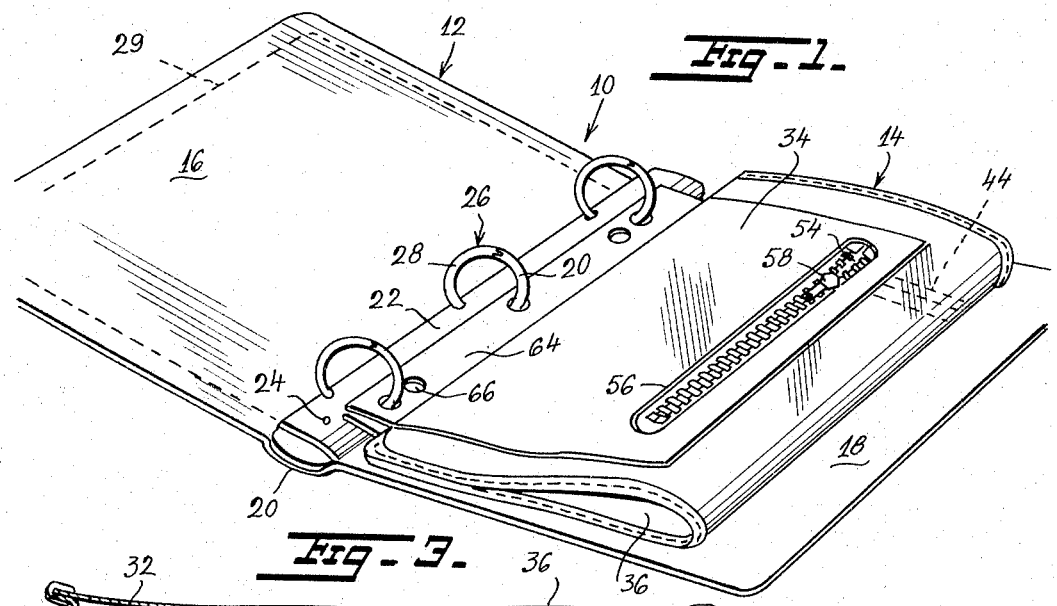

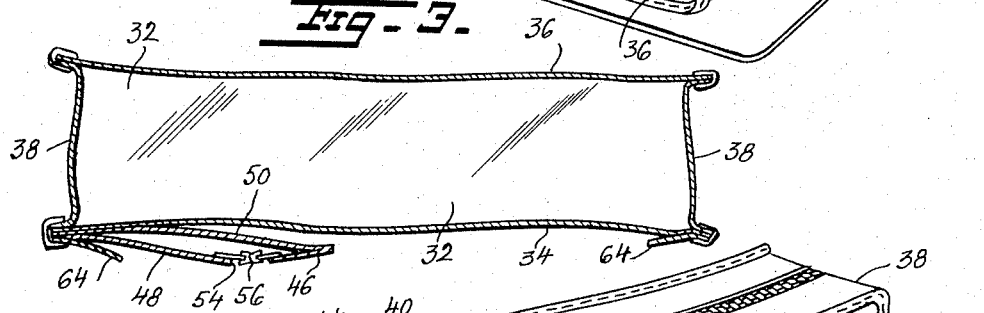

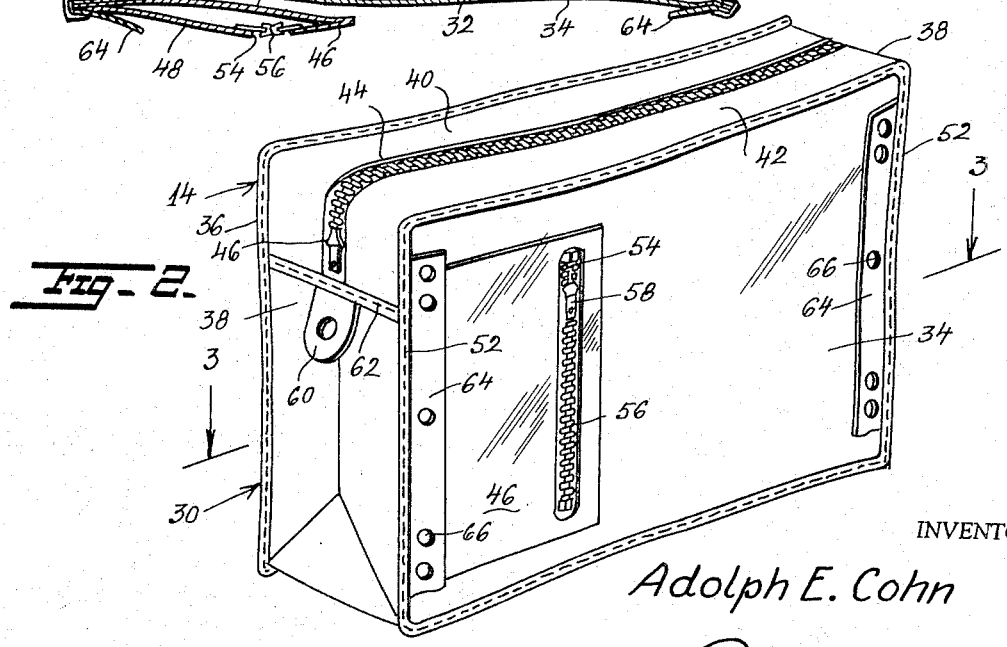

INVENTOR

Adolph E. Cohn

BY Polachek & Saulsbury

ATTORNEYS