June 14, 1927. 1,632,564

C. A. SAYERS

SIDE WINDSHIELD FOR VEHICLES

Filed July 1, 1926

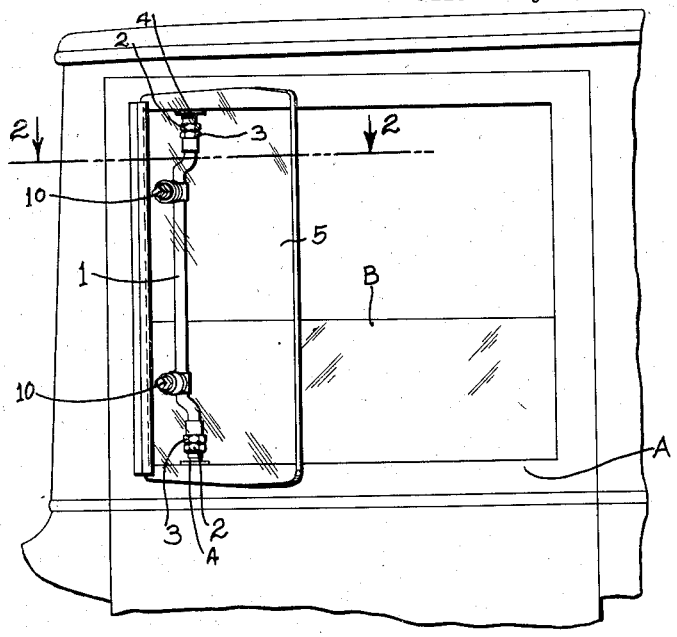

FIG. 1

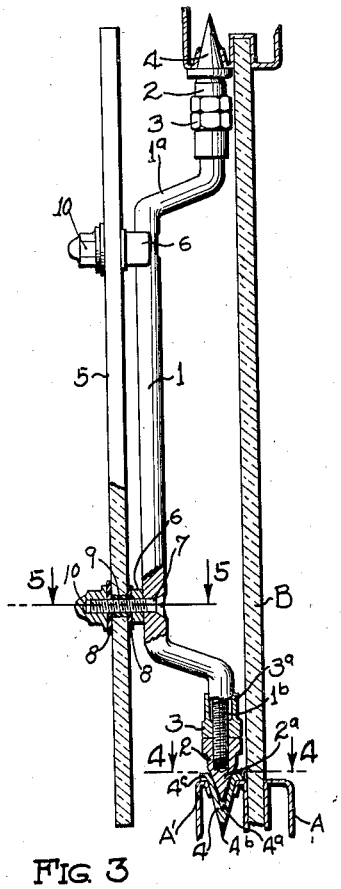

FIG. 3

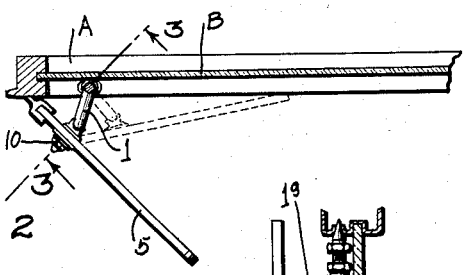

FIG. 2

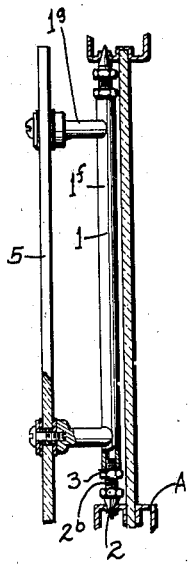

FIG. 6.

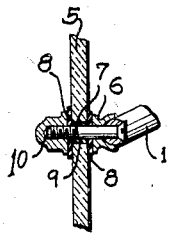

FIG. 5

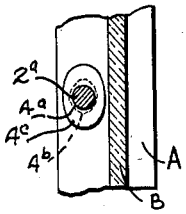

FIG. 4

INVENTOR.
CHARLES A. SAYERS
BY A. B. Bowman
ATTORNEY.